ALUMINIUM EXTRUSION MANUAL

AUSTRALIAN ALUMINIUM COUNCIL LTD

Introduction

The Australian Aluminium Council published 'Aluminium Standards, Data & Design – Wrought Products' in 1993. As this publication is now out of print and not available on-line and as there is demand for its content from many different areas, it has been decided to produce a modified on-line document.

In order to provide access to a document as quickly as possible and recognising the importance of the extrusion industry in Australia, it was decided to produce the 'Aluminium Extrusion Manual' which is designed for users and specifiers of aluminium extrusions. While most of the data has been updated there are some sections which have been transferred directly from the original publication. It does not include data on some of the more specialised alloys used in the aviation and space industries.

It is intended that a publication covering rolled products will be produced at a later date.

It is intended that this document, in general, aligns with the Australian Standard AS/NZS 1866. ***If there is anything included, which does not align to this Standard, variations will be referenced.***

The Australian Aluminium Council welcomes any suggested corrections or comments.

Extrusion Industry in Australia

The local aluminium extrusion industry supplies a significant proportion of Australia's extrusion requirements with presses and surface finishing facilities in all mainland states. The major end-use is the building and construction market followed by the transport sector. Extrusions using the high strength alloys of the 2000 and 7000 series would normally be imported as there is not a large aircraft industry in Australia.

Modified, online document (see above) published January 2023
Australian Aluminium Council
L1, 18 National Cct, The Realm, Barton ACT 2000
General Enquiries 02 6267 1800
Email: info@aluminium.org.au

This is an online document and will be uncontrolled if printed. Correct as at: 28 February 2023.

The Council would welcome any comments or possible corrections to this publication.

Contents

The Characteristic Advantages of Aluminium Extrusions 4

Product Advantages 6

The Extrusion Process And Design Parameters 9

The Extrusion Process 9

Extrudability 10

Section Classification 14

Extrusion Alloys 15

Alloy Tempers 15

Design Parameters 19

Shape Configuration 19

Tolerances 21

Surface Finish 21

Alloy Selection 21

Circumscribing Circle Size 22

Designing for Ease of Assembly 31

Nesting Joints 31

Interlocking Joints 33

Snap-Fit Joints 34

Three-Piece, Blind-Fastened Joints 35

Combination Joints 35

Slip-Fit Joints 36

Key-Locked Joints 37

Screw Slots 38

Designing for Fabrication 40

Forming 40

Machining 40

Joining 40

The Economics of Extrusion Design 41

Production Quantity 41

Product Shape 41

Tolerances 42

Alloy 42

Surface Finish 42

Length 42

Value Analysis 42

Extrusion Alloys And Their Typical Applications 44
Extrusion Bending 45
Bending Machine Types 45
Alloys And Tempers 46
Shape Factors 46
Recommended Bending Radii For Round Tube 52
Surface finishing 53
Machining 57
Joining 59
Standards For Extruded Products 62
Definitions 62
Wrought Alloys – Chemical Compositions 63
Mechanical Properties 67
Standard Tolerances 69
Examples Illustrating the Use of Table 17 74
Metal Surface Finishes for Extruded Products 81
Typical Mechanical Properties (Extrusion alloys only) 82
Typical Physical Properties (Extrusion Alloys only) 84
Typical Heat Treatments (Extrusion alloys only) 86
Typical Heat Treatment Conditions (Extrusion alloys only) 87
Typical Tensile Properties at Various Temperatures (Extrusion alloys only) 88
PROPERTIES OF STANDARD EXTRUSION SHAPES 91
Angles – Structural 97
Rectangular Bar 103
Square Bar 109
Channels – Architectural 110
Channels – Structural 114
I-Beams - Structural 115
Architectural Tees 116
Structural Tees 118
..... 118
Top hats 119
Rectangular tube 120
Round tube 122
Square tube 127
Zeds 128

The Characteristic Advantages of Aluminium Extrusions

Products made from aluminium extrusions give good performance in service and are economically attractive. Aluminium extrusions offer the designer and manufacturer a choice and combination of useful characteristics unmatched by any other material.

The major advantages that characterize the extreme versatility of aluminium extrusions are listed below under two broad headings:

PHYSICAL/CHEMICAL ADVANTAGES (Characteristic of aluminium itself)	**PRODUCT ADVANTAGES** (Characteristic of extruded aluminium products)
Light	Attractive in appearance
Strong	Suitable for a wide range of finishes
High in strength-to-weight ratio	Virtually seamless
Resilient	Easy to fabricate
Ductile at low temperatures	Joinable by various methods
Corrosion resistant	Suitable for complex, integral shapes
Non-toxic	Suitable for easy-assembly designs
Heat conducting	Produced to precise, close tolerances
Reflective	Produced with uniform quality
Electrically conducting	Recyclable
Non-magnetic	Cost-effective
Non-sparking	Able to provide freedom of design
Non-combustible	

These advantages may be selected and combined, almost without limitation, to give an aluminium extrusion which is tailored to specific requirements. In many instances the final product may be produced using a single material and process.

PHYSICAL/CHEMICAL ADVANTAGES

Aluminium is:

Lightweight
Volume for volume, aluminium is approximately one-third of the weight of iron, steel, copper or brass. (One cubic metre of aluminium weighs approximately 2,700 kg; a cubic metre of steel 7,800 kg.) The light weight of aluminium is an advantage in many product applications and is crucial in some. It may also reduce shipping and handling costs, thus providing a "hidden" benefit for both manufacturer and customer. Because of its light weight, aluminium is easy and cheap to transport.

Strong
By appropriate alloying and treatment, aluminium alloys can be produced with a guaranteed minimum yield strength as high as 300 MPa and are stronger than some steels. However, aluminium alloys are made in a wide variety of strengths and may be selected to match product needs.

High in Strength-to-Weight Ratio
Aluminium offers a combination of strength and lightness exhibited by few other materials. This combination may be measured in terms of a "strength-to-weight" ratio: a material's ultimate tensile strength divided by its density. Aluminium's advantage in this respect founded the modern aerospace industry and serves widely in various forms of transportation and other applications.

Resilient
Aluminium products behave elastically under static and dynamic loading conditions. This resilience, or ability to resume both shape and size, not only protects the form of an aluminium product, but may be "designed in" as a deliberate product function when flexible strength is important.

Ductile at Low Temperatures
As the temperature is reduced, aluminium alloys increase in strength without loss in ductility, making them particularly suitable for low-temperature applications, including cryogenics.

Corrosion-Resistant
Aluminium is highly resistant to corrosion. On surfaces exposed to the atmosphere a thin (5 to 10 nm), transparent, inert oxide film forms and protects the metal from further oxidation. If this protective layer is scratched through, it rapidly reforms and the metal remains protected against corrosion. Properly alloyed and treated, aluminium can resist corrosion by water, salt and other environmental factors. It can also resist attack by some acids and a wide range of other chemical and physical agents.

Non-Toxic
Aluminium is non-toxic and is widely used in food preparation and packaging, and in chemical processing and handling. It has a smooth, non-porous, easily cleaned surface which does not absorb bacteria-sustaining materials.

Thermal Conductivity
On the basis of either cost or weight, aluminium conducts heat better than any other common metal. Its superior performance in this respect is important in heat exchange applications — either heating or cooling — and aluminium heat exchangers are common in the food, chemical, petroleum, aircraft, automotive and other industries.

Reflective
Aluminium is an excellent reflector of radiant energy. It reflects more than 80% of both visible light and the invisible radiation beyond both ends of the visible spectrum. It is very effective as a shield against, and a reflector of, light and infra-red (heat) radiation, as well as the electromagnetic waves of radio and radar.

Electrical Conductivity
Volume for volume, aluminium's ability to conduct electricity is approximately 62% of copper. However, since aluminium has less than one-third the density of copper, an aluminium conductor of equivalent current carrying capacity is only half the weight of a copper conductor. Aluminium is often the most economical choice for electrical system components, and it is used almost universally for bulk power transmission. The electrical conductivity of aluminium is reduced when it is highly alloyed.

Non-Magnetic
The non-magnetic property of aluminium makes it particularly useful for a variety of electrical and electronic applications, for high-voltage hardware and electrical shielding in busbar housings, for equipment used in strong magnetic fields and for enclosures for magnetic compasses and other sensitive electrical/magnetic devices.

Non-Sparking
Although not as well-known as some of the other properties of aluminium, its non-sparking characteristic (against itself and other non-ferrous metals) makes aluminium an essential material for products used with highly flammable or explosive substances and atmospheres.

Non-Combustible
Aluminium in normal wrought product form such as extrusions, sheet, and plate, does not burn and is therefore a widely used material in buildings, vehicles and other applications where fire is a potential hazard to life or property.
This is really self-evident when we consider what we do with aluminium products such as welding, melting for castings, cookware. Most aluminium alloys melt somewhere in the range of 600-660C. Hazardous emissions are not generated when aluminium is exposed to heat.
Aluminium and other metals when in powder form needs to be treated carefully because of the possibility of rapid oxidisation and explosion.

Product Advantages

Aluminium extrusions are:

Attractive in Appearance
The natural metallic surface of aluminium is aesthetically pleasing in many product designs; the surface supplied is entirely adequate and does not require further finishing, thus reducing product cost. Aluminium's natural protective oxide film is transparent and, if additional protection is required, it may be thickened by anodising.

Suitable for a Wide Range of Finishes
Where a plain aluminium surface does not suffice, a wide range of finishes may be applied to aluminium to enhance its surface characteristics, or to alter its appearance. The characteristic metallic surface may be coloured by chemical or anodising processes. Surface textures may be created, varying from rough to matte to mirror-smooth. Surface coatings such as paint, lacquer, enamel, electroplating or laminate may also be applied.

No Visible Seams
Generally aluminium tube and hollow sections show no visible seams to mar the appearance or functionally of the finished product.

Specialised presses and toolage can be used to produce truly seamless tube required for critical applications such as the aviation and space industries.

Easy to Fabricate
Aluminium extrusions can be made with almost any kind of cross-sectional shape. They may be further fabricated with ease by conventional methods such as cutting, drilling, punching, machining, bending, etc.

Joinable by Various Methods
Aluminium extrusions can be joined to other aluminium products or to different materials by all major methods, including welding, brazing, soldering, bolting, riveting, clinching, crimping, clipping, adhesive bonding and slide-on, snap-together or interlocking joints.

Suitable for Complex, Integral Shapes
Aluminium extrusions may be produced in complex shapes that combine functions which would otherwise require the production and joining of several different parts. This capacity for integral design and production can reduce product cost and, at the same time, improve performance and reliability. In many instances, aluminium extrusion can economically provide product shapes that would be difficult, if not impossible, to produce in any other way.

Suitable for Easy-Assembly Designs
Aluminium extrusions can be designed for ease of assembly with other parts. The design may include mating surfaces to provide various types of interlocking joints that connect easily. Such an approach makes possible the production of large items in the form of dis-assembled kits that require the minimum of manpower and skill to assemble — there may also be cost-saving associated with packaging and delivery.

Produced to Precise, Close Tolerances
Aluminium extrusions are commercially produced to standard dimensional tolerances. These tolerances are precise and are specified to be sufficiently close to ensure that the extrusions will provide a proper fit when assembled with other components. Minimum cost results when an extruded product is designed to function well at standard production tolerances. However tighter tolerances may be specified when required.

Produced with Uniform Quality
Aluminium extrusions, of uniform high quality, may be produced in large numbers with minimal rejection rates and little need for corrective fabrication.

Recyclable
The aluminium industry includes a large "secondary metal" sector which accepts scrapped aluminium products for remelting and recovery of the metal — recycling aluminium requires only 5% of the energy needed to produce new aluminium. Aluminium extrusions may be recycled and therefore have substantial scrap value.

Cost-Effective
The "tools" required for aluminium extrusion — the dies and other elements — are relatively inexpensive compared with those required for other production methods and consequently their initial cost may be more readily amortized. In even relatively small production runs, aluminium extrusion may pass the "break-even" point and be more economical than alternative processes, particularly when the secondary savings from reduced machining, finishing and simplified assembly

are taken into account. With their added advantages in many other areas, aluminium extrusions frequently provide the only correct cost-effective product solution.

Able to Provide Freedom of Design

Aluminium extrusion allows production of an item in a desired shape, with the design of its cross-section not restricted in any way by a need to accommodate standard shapes. The use of alternative material often requires the design, manufacturer and joining of separate parts and may, in fact, require the use of several different materials to give a product with characteristics comparable to those of the aluminium extrusion. The additional steps involved add to cost and generally the process does not compare favourably with aluminium extrusion, with its inherent freedom of design and ability to provide an integral product using a single material and process.

The Extrusion Process And Design Parameters

The Extrusion Process

In the extrusion process, a cylinder of solid metal (the extrusion ingot or billet) is converted into a continuous length of uniform cross-section by forcing it to flow under very high pressure through a die orifice which is so shaped as to impart the required cross-sectional form to the product. Extrusion is normally a hot-working operation, the metal being heated to achieve an optimum level of plasticity. Two extrusion methods are in use — direct extrusion and indirect extrusion. (Indirect extrusion will not be included in this publication as it is not common in Australia.)

Direct Extrusion

The direct extrusion process is illustrated in Figure 1 below. A cylindrical aluminium alloy billet of cast or extruded metal, heated to between 450 and 500°C, is loaded into the container and then forced through a die orifice under high pressure. The die is supported by a series of back dies and bolsters so that the main press load is transferred to a front platen.

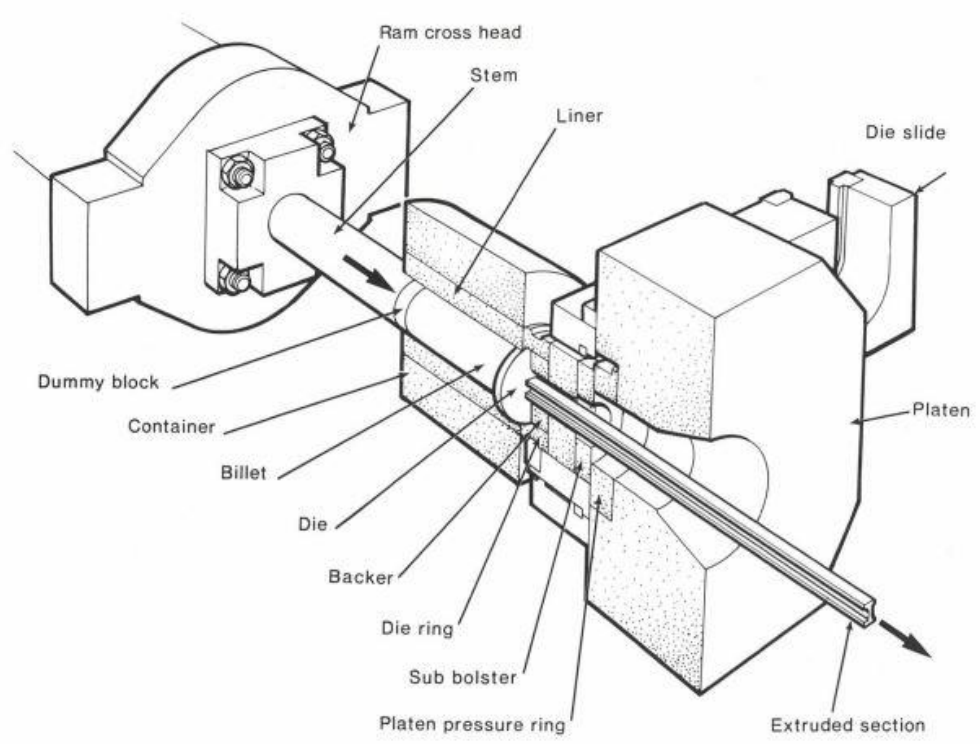

Figure 1: The Direct Extrusion Process

On leaving the die the temperature of the extruded section is more than 500°C. With heat-treatable alloys, solution heat treatment or quenching takes place on the production line and is achieved by water bath, water spray or forced air draught depending upon the quench sensitivity of the alloy being extruded and the temper required.

Extrusion of Hollow Sections

Hollow sections are extruded using a composite die known as a "bridge" or "porthole" die. The die divides the metal into two or more separate streams which flow under the bridge and are pressure welded together around a mandrel. The metal then flows through the aperture between the mandrel nose and the outer shape cut in the die, to emerge as a hollow extruded section. See Figure 2 below. The process gives integral material quality with no reduction of strength in the extrusion weld planes.

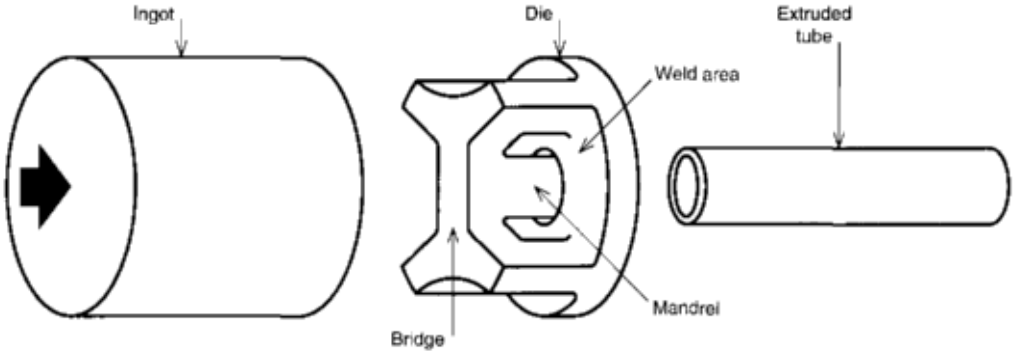

Figure 2: Extrusion of a Hollow Section

Extrudability

For both technical and commercial reasons, it is desirable to have some means of evaluating the degree of difficulty involved in producing an extruded section. This is usually achieved by calculating the section's extrusion ratio and shape factor and using these quantities to make an assessment of extrudability based on known extrusion experience.

Extrusion Ratio

The extrusion ratio is the value obtained by dividing the cross-sectional area of the extrusion ingot by the cross-sectional area of the extruded section. The size and type of press imposes a limit for the extrusion ratio of the profiles to be extruded.

The optimum extrusion ratios for direct extrusion are usually between 30 and 60. At low values of 7 or less, very little working of the material occurs during extrusion. There is a corresponding reduction in mechanical properties and a possibility of coarse grain band formation. Extrusion ratios of 80 or greater require high break through pressures which may cause distortion and breakage of the die.

Shape Factor

The resistance of a section to extrusion is a function of its shape and may be expressed in terms of a relationship between the section's periphery and cross-sectional area. The relationship, known as a shape factor, may also include the density of the extruded material (aluminium = 0.0027 g/mm^3) and for aluminium extrusion is usually defined as

$$\text{Shape Factor} = \frac{\text{Periphery of section (mm)}}{\text{cross-sectional area (mm}^2\text{)}} \times \frac{1}{0.0027}$$

A measure of extrudability may be obtained by comparing the shape factor of a proposed extrusion with that of a similar existing extrusion of known difficulty. The method is not precise, however, since any large difference in wall thickness can alter the shape factor substantially. In general, the higher the shape factor of a section the more difficult it is to extrude and the more restricted is the choice as to an alloy suitable for extrusion. This can limit the use of some high strength alloys. Typical shape factors are given in Table 1 below.

Table 1: Typical Shape Factors

Section Type	Circumscribing Circle Diameter'	Thickness (mm)	Shape Factor (mm^3/g)
	142	2.5	300
	70	1.5	500
	112	5.0	152
	142	Solid	15
	70	Solid	30
	50	3.0	247
	50	1.5	494
	210	3.0	190
	210	2.0	285
	140	2.0 & 6.0	183
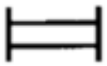	40	2.0 & 1.5	430

Footnote

[1] The Circumscribing Circle Diameter is the diameter of the smallest circle which will completely enclose the cross-section of the extruded shape.

SIZE

The size of an extrusion is usually specified by its Circumscribing Circle Diameter —the diameter of the smallest circle which will completely enclose the cross-section of the extruded shape. The maximum size of extrusion that can be produced with a die is governed by the need to retain an unbroken ring of sufficient structural strength around the die orifice. The minimum width of this ring can vary from 20 mm on a die for extruding an average size solid section up to 60 mm or more on a die for a large hollow section. An average size section normally refers to one with a circumscribing circle diameter of less than 150 mm — a medium size section can measure up to 250 mm, with very large sections being up to 375 mm.

For ease of extrusion, the cross-section should be as symmetrical as possible with respect to the centre of its circumscribing circle. The flow of extruded metal is slower near the outer edge of the die orifice. A more uniform flow of metal may therefore be achieved by placing the thicker parts of a section away from the centre.

THICKNESS

The thickness required in an aluminium extrusion, although based on the desired cross-section geometry, is also influenced by the alloy type, the die face pressure and extrusion rate, and the need to provide a section that has sufficient strength to give stability during solution heat treatment and subsequent handling. A guide to minimum metal thickness is given in Graph 1 below.

Graph 1: A Guide to Minimum Metal Thickness

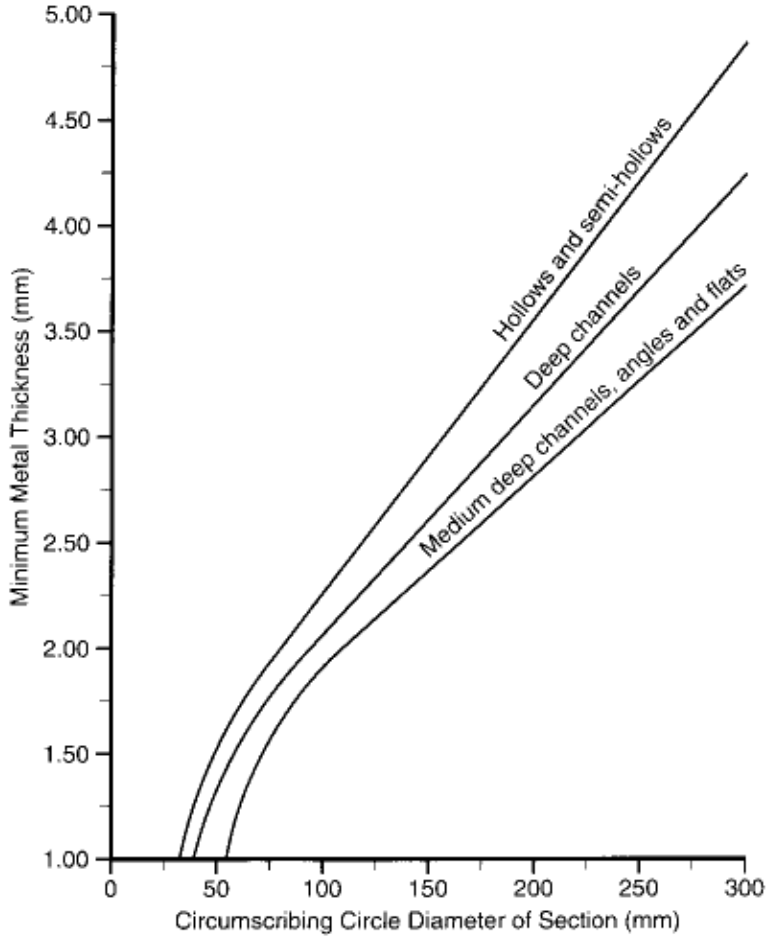

NOTE:
1. Graph 1 is based on Alloys 6060 and 6063 and assumes good extrusion practice.
2. For Alloys 6005A, 6061, 6351 and 6082 multiply the minimum metal thickness by 1.25.
3. Thicknesses below 1.20 mm are for small, specialized presses capable of very high die face pressures.

The extrusion process will tolerate variations in section thickness, but it is important to avoid any abrupt change. A radius or blending curve should be used to give an acceptable transition between

different thicknesses. See Figure 3 below. Local thinning, in the form of a shallow groove, may be incorporated in most sections and is a useful way of providing a pressure hinge in an element that will be deformed during subsequent fabrication. See Figure 4 below.

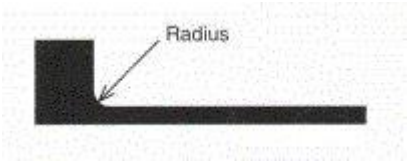

Fig. 3: A Thick to Thin Transition

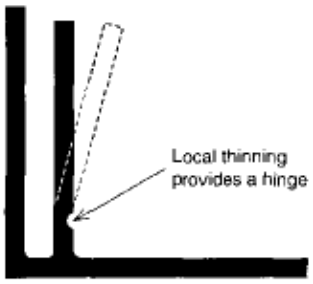

Fig. 4: A Pressure Hinge

SLOTS

The formation of a slot or open box channel in an extruded section requires a finger or box spigot to be retained in the die orifice. Under the pressure of extrusion, the spigot acts as a cantilever and must have sufficient strength in itself to withstand the loading — it is not usually possible to reinforce the spigot. This limits the size and type of slot that can be extruded. The limit may be expressed in terms of a slot's aspect ratio, calculated as shown in Figure 5 below. An aspect ratio of 3:1 is often taken as a practical maximum, however higher ratios are possible with readily extruded material, particularly alloy 6060. A lower maximum ratio should be used when the gap dimension is less than 3 mm.

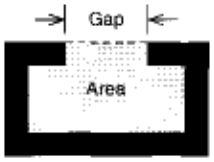

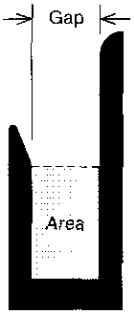

Aspect Ratio = $\frac{\text{Area}}{\text{Gap}^2}$

Figure. 5: Slot Aspect Ratios

CORNERS

Sharp corners are normally avoided in aluminium extrusions — all corners are usually radiused. When absolutely necessary, a sharp corner may be incorporated in a section, but the life of the die and rate of extrusion will both be markedly reduced. Sharp corners also give problems with painted finishes, producing obvious sight lines in the finish. The breaking of a corner by even a 0.5 mm radius is helpful in overcoming such problems, but for ideal extrusion conditions a corner radius should be related to the section size.

Section Classification

Extruded sections are classified according to their shape in three standard categories — solid, semi-hollow and hollow. A solid shape has a geometry that does not form a void; a semi-hollow shape contains a partially enclosed void with an aspect ratio that classifies it as a semi-hollow area in accordance with Table 3 on page 20; a hollow shape usually contains a fully enclosed void (but see also Table 3 for aspect ratios above which a semi-hollow area is classified as a hollow). Production costs generally increase with section category from solid through to hollow.

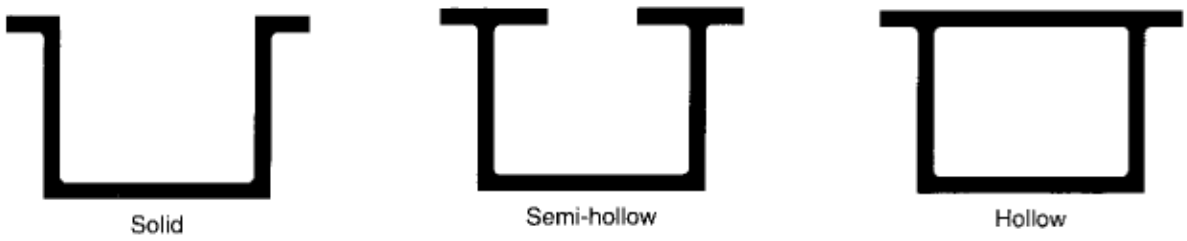

Figure 6: Standard Section Types

Extrusion Alloys

The aluminium alloys most widely used for extrusion are in the 6000 Series. The alloys of this series have been shown to possess the most satisfactory properties for extrusion and generally provide a product with a good surface finish, reasonably high strength and good corrosion resistance. When higher strength material is required, alloy 7005 is usually chosen.

The characteristics and typical applications of the aluminium alloys most frequently used in the extrusion industry are given in Table 2 below.

Table 2: Extrusion Alloys — Characteristics and Typical Applications

Alloy	Characteristics	Typical Applications
6060, 6063	Suitable for intricate extruded sections of medium strength. Forms well in the T4 temper. High corrosion resistance. Good surface finish.	The most widely used extrusion alloy. Architectural members (glazing bars and window frames), windscreen sections, road transport.
6106	A stronger version of 6060, with most of that alloy's good surface finish and formability.	Road and rail transport, general engineering, ladders, light structures, curtain wall members.
6005A, 6061, 6351, 6082	The recommended alloys for structural purposes, with good strength and corrosion resistance.	Road and rail transport, scaffolding, bridges, cranes, heavy-duty structures.
6101	The best combination of electrical and mechanical conductor properties, with an electrical conductivity of 55% of IACS.	Busbars, electrical conductors and fittings.
6463A	Based on high purity aluminium, this alloy was developed to respond well to chemical brightening and electrochemical brightening or anodising. It has excellent formability.	Motor car trim and other applications requiring a bright decorative finish.
7005	A high strength alloy with moderate corrosion resistance.	Structures, transport, general engineering.

Alloy Tempers

Most of the aluminium alloys used for extrusion are of the heat-treatable type and their strength may be improved by controlled thermal treatment after extrusion. Although extrusions are produced in "as fabricated" F temper material, production in one of the following stronger tempers is more usual:

T1 -- Cooled from an elevated temperature shaping process and naturally aged.
T4 — Solution heat-treated or cooled from an elevated temperature shaping process and naturally aged.
T5 — Cooled from an elevated temperature shaping process and then artificially aged (precipitation treated)
T6 — Solution heat-treated or cooled from an elevated temperature shaping process and then artificially aged.

The T4 temper is usually produced "on-line". The extruded section emerges from the die at approximately 500°C and is then rapidly cooled (quenched) by water immersion, water spray or forced air draught, the method of cooling chosen depending on the alloy, the section shape and the extrusion rate. Although stronger than the F condition, T4 temper material is still of a relatively low strength and, with its high elongation value, makes an excellent choice where severe forming is required. At room temperature, natural ageing or hardening occurs over a period of several days making the alloy considerably stronger. With some alloys this limits the time available for forming.

T5 temper material is of greater strength and is obtained by passing the extrusion directly to a precipitation or artificial ageing treatment. The precipitation or artificial ageing treatment is achieved by heating the extrusion to approximately 180°C in an oven and soaking it at this temperature for several hours. A T5 temper is particularly suitable for thin sections requiring improved dimensional stability.

T6 is the strongest of the three tempers and results from the combined effect of solution heat treatment followed by artificial ageing. The solution heat treatment is sometimes achieved by rapidly cooling (quenching) the extruded profile by water immersion, water spray or forced air draught soon after it leaves the die.

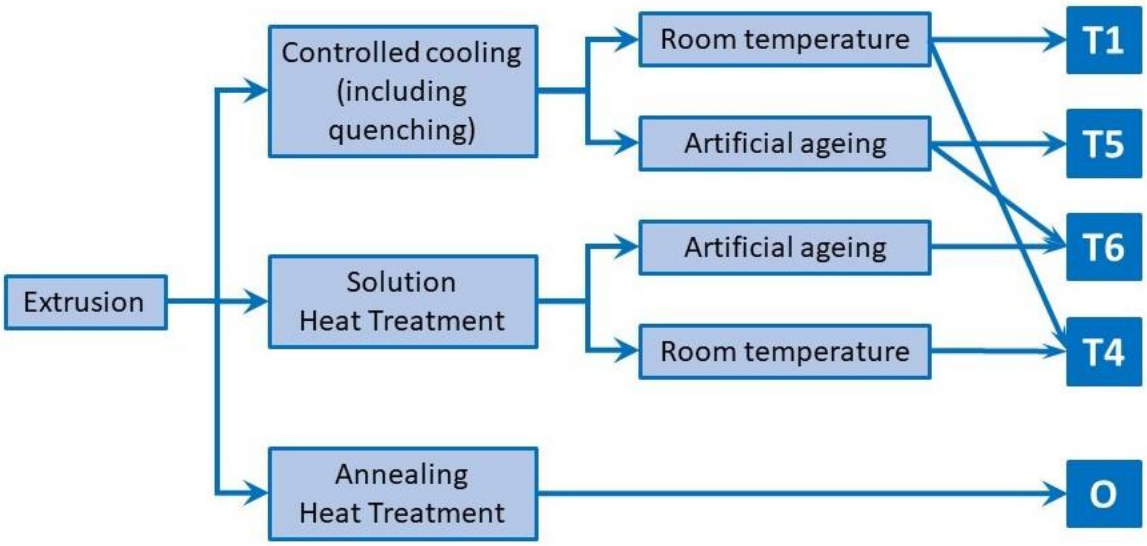

Figure. 7: Extrusion Tempers

The relationship between mechanical properties and heat treatment was first discovered by A. Wilm (1906), who observed that when aluminium alloyed with copper was quenched from a relatively high temperature, it increased in hardness on standing subsequently at room temperature. This phenomenon, known as age-hardening, is now known to occur in numerous alloys. The technology of heat treatment has been developed and refined over the years and has led to the development of a wide range of heat-treatable aluminium alloys with properties that may be improved by carefully controlled thermal treatment. The following simplified explanation of the heat treatment processes involved may be of background interest.

Solution Heat Treatment

The chemical elements used to form alloys with aluminium, either between themselves or in combination with aluminium, form compounds which show increasing solid solubility in aluminium with increasing temperature. A typical solubility diagram is shown in Figure 8 below. At temperatures immediately above point A, which depends on the amount of the alloying element (2% is used as an example in Figure 8), the constituents form a homogeneous solid solution. A rapid drop in temperature, usually produced by quenching with cold water, prevents precipitation of the compounds from solution and gives rise to a highly supersaturated solid solution. The process temporarily "stabilizes" the metallic structure and renders the alloy very workable for a short time.

The quenched condition, however, is not stable at room or elevated temperatures and precipitation of the intermetallic compounds from the supersaturated solution soon begins. After a period of several days at room temperature, termed natural ageing or room-temperature precipitation, the alloy exhibits an improvement in both strength and hardness. (From X-ray diffraction, it has been deduced that ageing is accompanied by a segregation of the element atoms into clusters or "knots" at numerous points within each grain.) The T4 temper designation applies when the material has been naturally aged to a substantially stable condition.

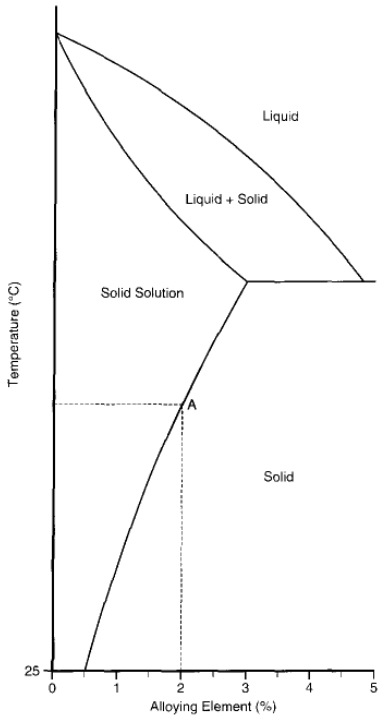

Figure 8: A Typical Solubility Diagram

Artificial Ageing

Ageing may be accelerated by heating the alloy for several hours at a moderately elevated temperature (approximately 180°C), the period of time being controlled to produce stable properties. This process of artificial ageing, also known as precipitation treatment or precipitation hardening, results in a marked improvement in both strength and hardness, usually to a level well above that obtainable by natural ageing.

Design Parameters

Five major factors should be considered in the detailed development of an aluminium extrusion design:

- Shape configuration.
- Tolerances.
- Surface finish.
- Alloy selection.
- Circumscribing circle size.

These parameters are interrelated in their effect on the extrusion design and its application.

Shape Configuration

The designer's first priority is to satisfy a specific need and aluminium extrusion allows you to design the shape that best meets your structural and aesthetic requirements. Since extrusion dies cost little, a designer can afford to use several different shapes, if that is the best way to achieve their objectives.

Users of computer-aided design programs will find aluminium extrusions a uniquely satisfying product because the cross-section can be profiled to meet optimum structural requirements.

Extrusions can be designed to aid in assembly, improve product appearance, reduce or eliminate forming and welding operations and achieve many other purposes.

Extruded shapes are described in three general categories — solid, semi-hollow and hollow. Dies to produce solid shapes are the least complex. But the difference between a semi-hollow shape and a hollow shape may not be obvious at first glance. It is easier to describe and understand all three categories by working in reverse, starting with hollow shapes.

A Hollow Shape

A hollow shape is simply an extruded shape which, anywhere in its cross-section, completely encloses a void. The void itself may have any sort of shape and the complete profile may include a variety of other forms; but if any part of it enclosed a void, it is classified as a "hollow".

Extruders further divide hollow shapes into four classes:

Class A Hollow Extruded Shape	A single void hollow extruded shape, having no internal protrusions, with the void fully enclosed and greater than 15 mm in diameter or 177 mm2 in area. The void must be round, square or rectangular provided that the width to depth ratio is less than 5:1. Wall thickness must be uniform except that a non-uniform wall is allowed at radiused corners only, for internal and/or external radii up to 7.5 mm.
Class B Hollow Extruded Shape	A single void hollow extruded shape with the void fully enclosed and other than Class A, or a solid extruded shape incorporating a single semi-hollow area classified as a hollow according to Table 3.

Class C Hollow Extruded Shape	A multiple void hollow extruded shape with two or more fully enclosed voids (multi hollows incorporating any semi-hollow area classified as a hollow according to Table 3 will be classified as Class D hollows).
Class D Hollow Extruded Shape	Any hollow extruded shape which incorporates a semi-hollow area or any solid extruded shape incorporating multiple semi-hollow areas classified as hollows according to Table 3.

A Semi-hollow Shape

A semi-hollow shape is one that partially encloses a void — for example, a circle or rectangle with a gap in one side. However, some semi-hollow shapes are classified as hollows and the difference may not be obvious. It is defined mathematically by comparing the area of the partially enclosed void to the size of the gap (actually, to the mathematical square of the gap size). If that ratio is larger than a certain number, the shape is classified as a hollow; if the ratio is equal to or smaller, the shape is considered to be a semi-hollow. The ratios that distinguish hollow from semi-hollow shapes are given in Table 3 below.

Table 3: Semi-Hollow Area Classification for Extruded Shapes

Applied to symmetrical semi-hollow areas only (e.g., A1).
Asymmetrical semi-hollow areas (e.g., A2) are determined by negotiation with the supplier.

Gap Dimension G (mm)		Ratio A/G^2, above which a Over Up to Semi-Hollow Area is classified as a Hollow[1]
Over	Up to	
-	1.5	2.0
1.5	3.0	2.5
3.0	6.0	3.0
6.0	-	4.0

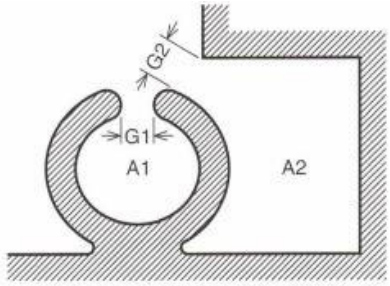

Footnote [I] A = semi-hollow area (mm^2).

Figure 9 below illustrates the selection of void areas and gap widths to be used in calculating the ratio for a typical semi-hollow shape. Use either the innermost void area D and gap width B, or the complete void area (C + D) and gap width A, whichever combination yields the larger ratio.

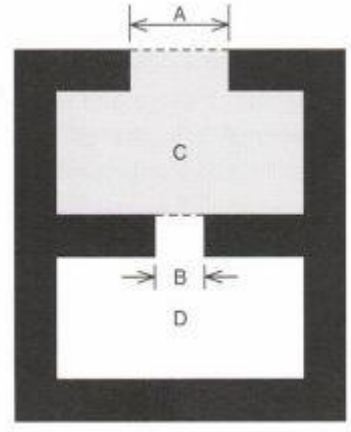

Figure 9: Selection of Void Areas and Gap Widths

A Solid Shape

A solid shape has a geometry that does not form a void.

Tolerances

In many applications in which the extrusion will be part of an assembly of components, tolerances are critical. A designer should be aware of the standard dimensional tolerances to which extrusions are commercially produced. These tolerances generally cover such characteristics as straightness, flatness and twist and such cross-sectional dimensions as thickness, angles, contours and corner or fillet radii. (See 'Standard Tolerances' on pages 65 to 76.)

Aluminium extrusions are often designed to minimize or eliminate the need for machining. If desired, extrusions can be produced to closer-than-standard tolerances, generating cost savings in secondary operations but increasing the extrusion cost. Such savings may range from modest to very large, depending on circumstances. The designer should consider their requirements carefully and order special tolerances only where they are really needed. If extruded parts are to interlock in any manner, the designer should work with the supplier to make sure that tolerances will provide a proper fit.

Surface Finish

One advantage of aluminium extrusions is the variety of ways the surface can be finished and this offers another range of choices to the designer.

As-extruded or mill finish, can range from structural, on which minor surface imperfections are acceptable, to architectural, presenting uniformly good appearance. It should be understood that under normal circumstances aluminium will be marred because it is a soft metal and that special care is required if a blemish free surface is desired — that is, this would not be a normal surface to expect.

Other finishes include scratch finishing, satin finishing and buffing. Aluminium can also be finished by clear or coloured anodising, or by painting, enamelling or other coatings.

If a product will have surfaces that are exposed in use, where normal processing marks may be objectionable, the extruder should be told which surfaces are critical. He can design a die that orients the shape to protect those surfaces during the extrusion process. He can also select packaging that will protect the product during shipment.

Alloy Selection

Aluminium extrusions are made in a wide variety of alloys and tempers to meet a broad spectrum of needs. Selection is made to meet the specific requirements in strength, weldability, forming characteristics, finish, corrosion resistance, machinability and sometimes other properties.

The complete list of registered aluminium alloys is quite long, but in practice a few alloys are chosen repeatedly for extrusion because of their versatility and highly suitable characteristics. Extruders generally stock the three or four most frequently used alloys. When their specialized markets justify it, individual companies include in their inventories additional alloys which will vary with the needs of their major customers. Thus, a substantial variety of extrusion alloys is regularly available.

The 6000 Series of aluminium alloys (those with a four-digit registration number beginning with 6) is selected for the majority of extrusion applications. Of these alloys, 6060, 6063, 6106, 6005A, 6061, and 6082 are used most frequently.

Alloys 6060 and 6063 are used for a broad range of solid and hollow products. They are easily welded, have a pleasing natural finish and excellent corrosion resistance. They are widely used in architectural and moderate- stress applications.

Alloys 6005A, 6061, 6351 and 6082 are good all-purpose extrusion alloys, combining higher mechanical properties with good corrosion resistance, weldability and machining characteristics. In the T6 tempers, they typically have yield strengths of 240 to 280 MPa; They are used in many structural applications.

Other alloys are also used to meet special requirements but they might not be readily locally available or have large minimum lot sizes.

For further details, the designer should consult current alloy and temper tables and discuss specific needs with the extrusion supplier.

Circumscribing Circle Size

One measurement of the size of an extrusion is the diameter of the smallest circle that will entirely enclose its cross-section — its “circumscribing circle”.
This dimension is one factor in the economics of an extrusion. In general, extrusions are most economical when they fit within a medium size circumscribing circle — that is, one with a diameter between 20 mm and 250 mm.

The example shown below would be classified as a 75 mm to 100 mm size shape.

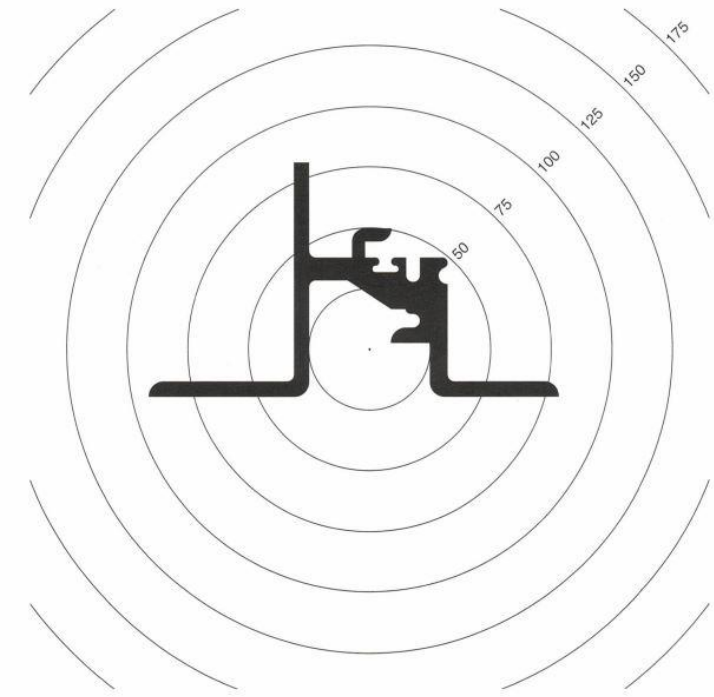

Good design practices
At this stage in the development of an extruded product, the designer has determined its functional shape and size and considered appropriate tolerances, surface finishes and alloys. By following good design practices, they can help to ensure high levels of quality control and product performance.

Before proceeding, it makes sense to review the extruder's available standard shapes. It may be possible to adapt a standard shape to the needs of the product, with little or no modification. If a standard shape is not readily adaptable, the design can be completed as a custom shape perfectly suited to the requirements of the product.

Here are a few tips on good practices in custom-designing aluminium extrusions:

Specify the Most Appropriate Metal Thicknesses
Specify metal thicknesses that are just heavy enough to meet your structural requirements. But in low stress areas, however, keep sufficient thickness to avoid risking distortion or damage. Some shapes tend to invite distortion during the extrusion process — such as an asymmetric profile or thin details at the end of a long flange. Such tendencies exert more influence on thin-walled shapes than on those with normal metal thickness.

Keep Metal Thickness As Uniform As Possible
Extrusion allows you to put extra metal where it is needed — in high stress areas, for example — and still save material by using normal dimensions elsewhere in the same piece. Adjacent-wall thickness ratios of less than 2:1 are extruded without difficulty. But large contrasts between thick and thin areas may create uneven conditions during extrusion. It is best to maintain near-uniform metal thickness throughout a shape if possible. When a design combines thick and thin dimensions, streamline the transitions with a radius (a curve, rather than a sharp angle) at junctions where the thickness changes sharply. Rounded corners ease the flow of metal.

Visualize the Die and the Metal Flow
Remember what an extrusion die does. While it lets metal flow through its shaped aperture, it must hold back metal all around that aperture against great force. When you design a shape for extrusion, you are simultaneously designing a die aperture and you must take extrusion forces and metal flow into account.

For example, a U-shaped channel in an extrusion corresponds to a solid tongue in the die, attached at only one end. Flexibility in this tongue can alter the aperture slightly under the pressure of extrusion. The deeper you make the channel, the longer you make the tongue and the more difficult it becomes to regulate the extruded dimensions. On the other hand, rounding corners at the base and tip of the tongue can ease metal flow and so help to keep the extruded dimensions more uniform. Even corners rounded to only a 0.5 mm radius can make extrusion easier.

Visualize the shape of the die that must produce your design and try to minimize shapes that would weaken the die or impede metal flow.

Use Metal Dimensions for Best Tolerance
Dimensions measured across solid metal are easier to produce to closer tolerances than those measured across a gap or angle. So, rely on metal dimensions as much as possible when designing close-fitted mating parts or other shapes requiring closer tolerances. Standard industry dimensional

tolerances are entirely adequate for many applications, but special tolerances can be specified if necessary.

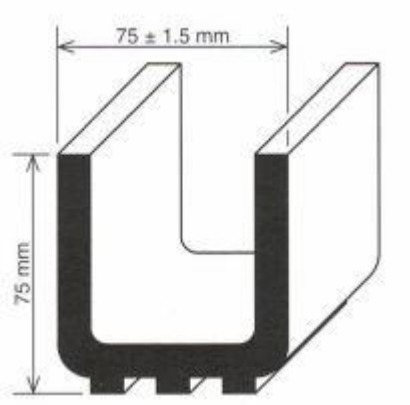

An Open Space Dimension is more difficult to hold to close tolerances.

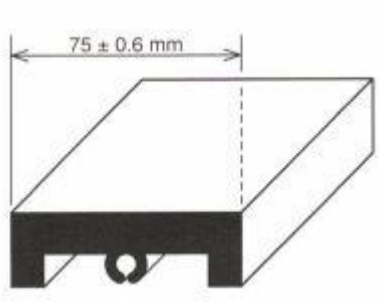

A Metal Dimension can be extruded to close tolerances.

Design With Surface Finish In Mind

Always indicate exposed surfaces on your design drawing so the extruder can give them special attention and protect their finish during both extrusion and post-extrusion handling.
The narrower the exposed surface, the more uniform will be its finish.

Webs, flanges and abrupt changes in metal thickness may show up as marks on the opposite surface of an extrusion, particularly on thin sections. The marking of exposed surfaces can be minimized by thoughtful design.

This shape, with sharp angular transitions, risks show-through streaks on the opposite surface.



Modifying the shape by rounding the transitions reduces the chance of opposite-side streaking.

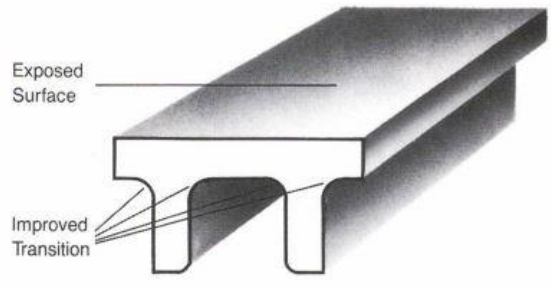

Different finishes may be applied to the same face of an extrusion, for aesthetic or functional reasons.

In this example, parts of the face are recessed and these protected areas are given a polished finish. The more critical areas are given a brushed finish that disguises any contact marks caused by normal handling and use.

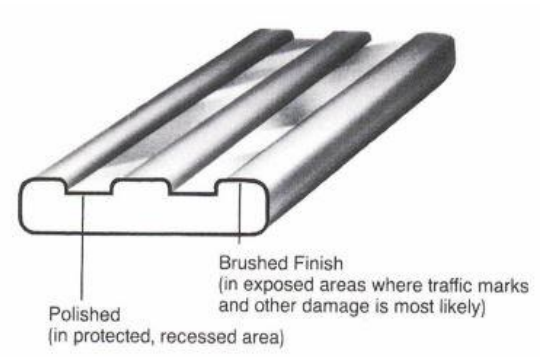

OBSERVE THESE EXTRUSION DESIGN GUIDELINES
Avoid Detail at the End of Long, Thin Rail

If thin detail is needed, such as the channel at the right below, you can:

	1	Move the detail closer to a support,
or	2	increase wall thickness to prevent distortion,
or	3	Provide support at the other end of the rail.

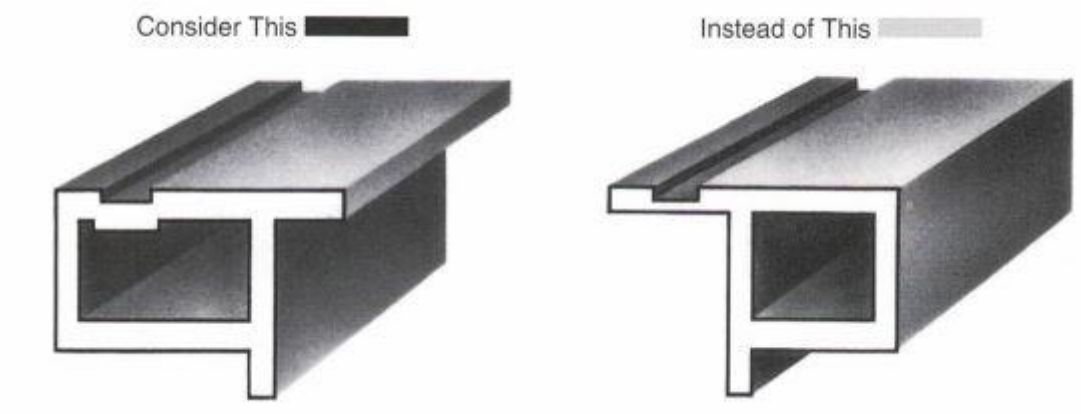

Thicker Walls May Be Less Expensive
In a Class C hollow extruded shape such as this double compartment heat exchanger, a very thin wall between two voids is difficult and costly to extrude.

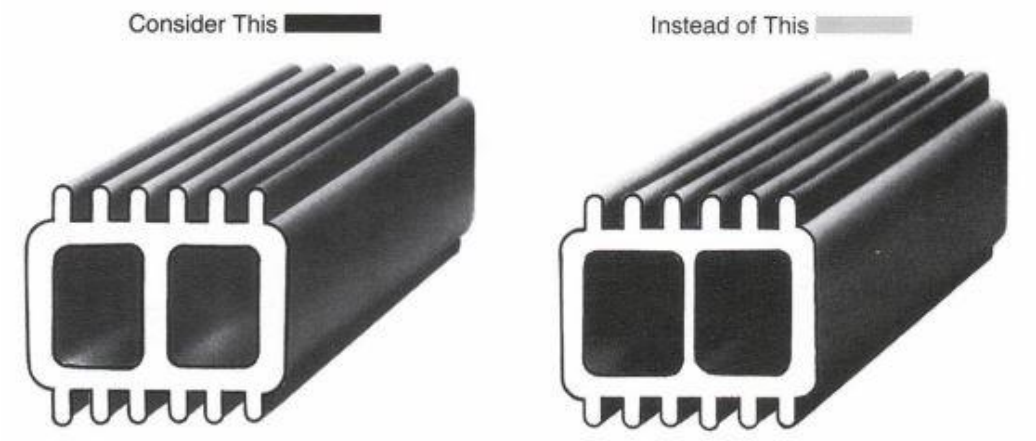

Web Gives Better Dimensional Control

Metal dimensions are more easily held than gap or angle dimensions. Web also allows thinner wall sections in this example. The hollow condition of the redesigned part can be avoided by making the component in two pieces as shown by the dotted line.

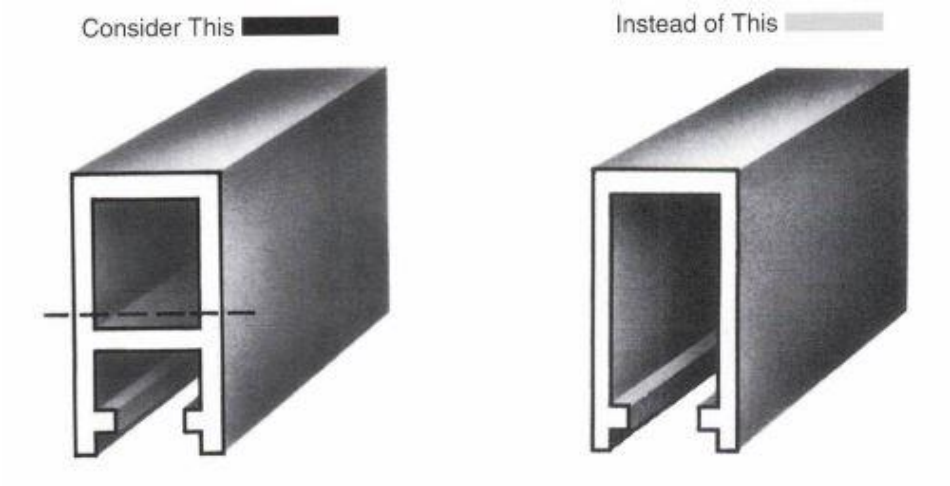

Smooth All Transitions

Transitions should be streamlined by a generous radius at any thick-thin junction.

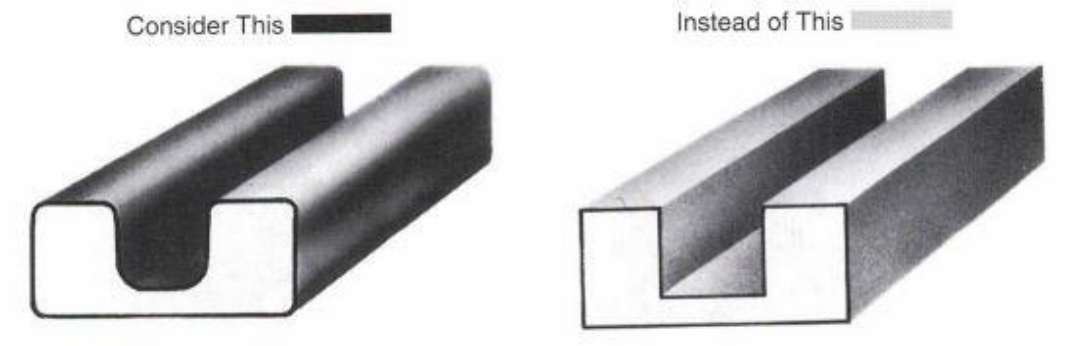

Keep Wall Thickness Uniform

The preceding shape can be further improved by maintaining uniform wall thickness.

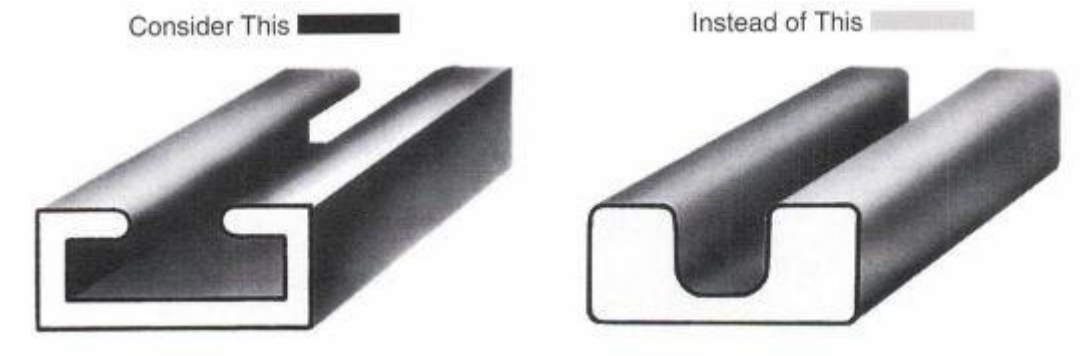

In addition to using more metal, thick-thin junctions give rise to distortion, die breakage, or surface defects on the extrusion.

NOTE: Sharp corners are shown in these design examples for publication clarity and should be considered as broken; typically identified as “sharp to 1 mm radius”.

Ribs Help Straightening Operation

Wide, thin sections can be hard to straighten after extrusion. Ribs help to reduce twisting and to improve flatness.

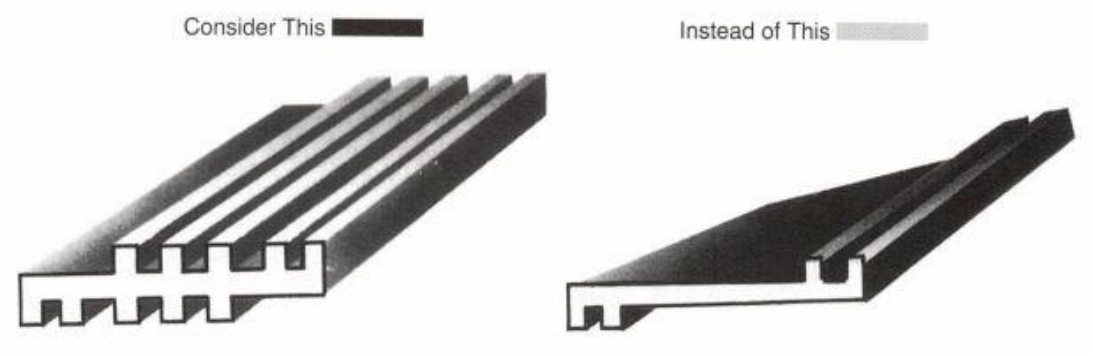

Streamlined Web Improves Surface Finish

Sudden changes in metal thickness of a flange or web can leave blemishes on the opposite surface, especially if the section is thin. Anodising will not cover these defects.

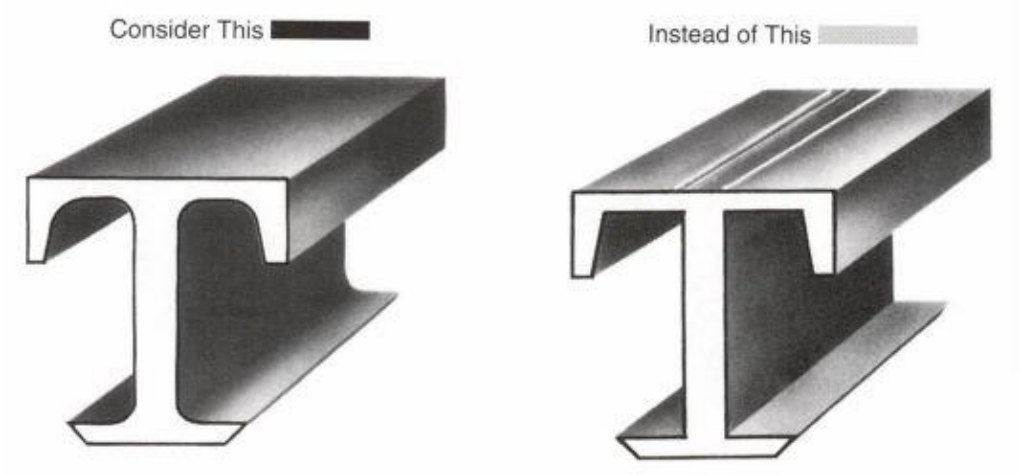

Parallel Lines Add Illusion of Length

With little extra effort or cost, designers can add grooves, ridges, or other decorative detail. Either the grooves or the raised surfaces can be coloured to emphasize contrast.

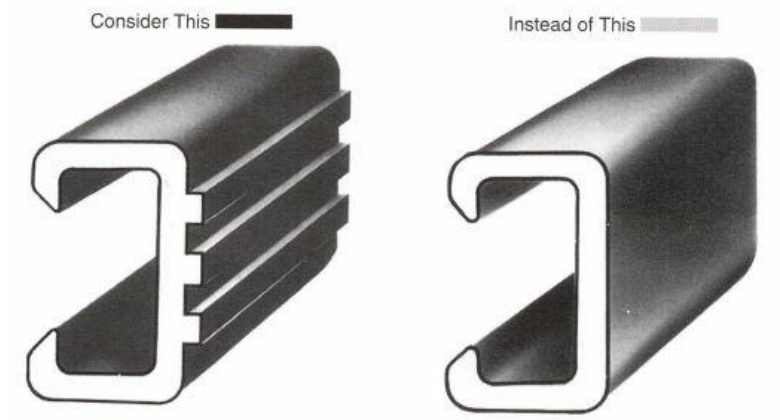

Symmetry Preferred in Semi-Hollow Areas

When designing visualize the die and tongue that will be necessary to produce the shape. By keeping the void symmetrical you lessen the chances that the die tongue may break.

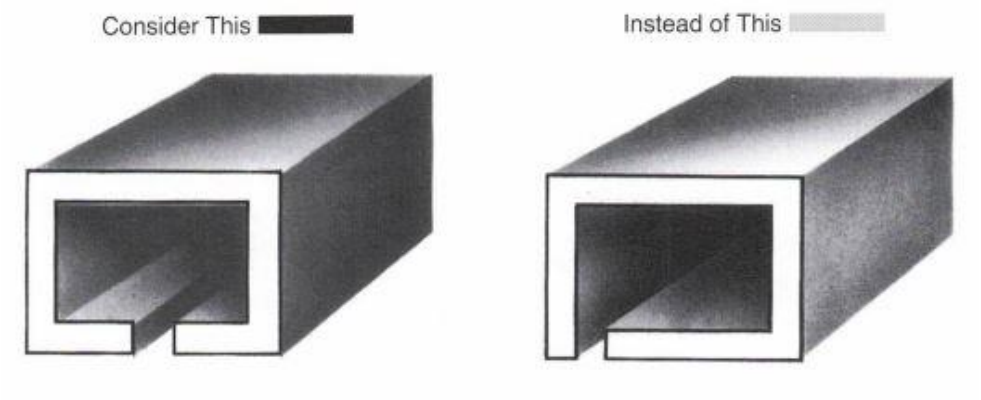

Rounded Corner Strengthens Tongue

The preceding cross-section has been further improved. The die tongue is now less likely to snap off.

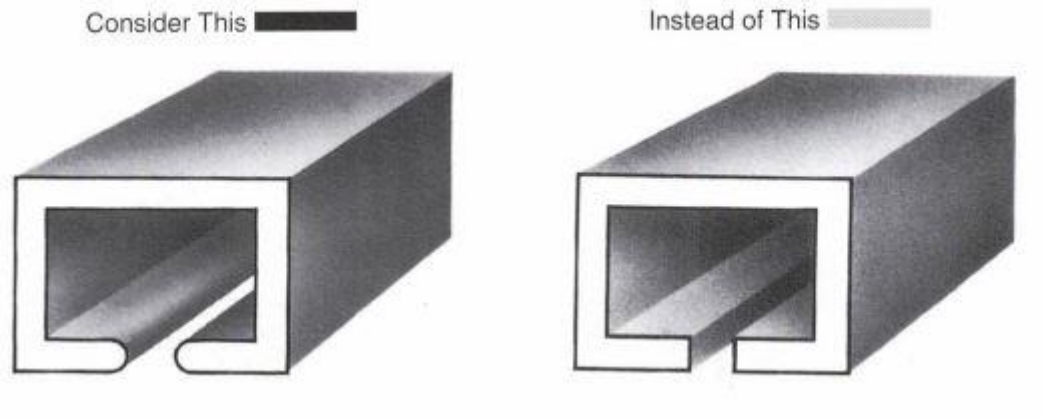

Reduce Area of Void —1

Further improvement results if outline can be changed to reduce area enclosed. Reduced area means less pressure on the tongue and easier extrusion.

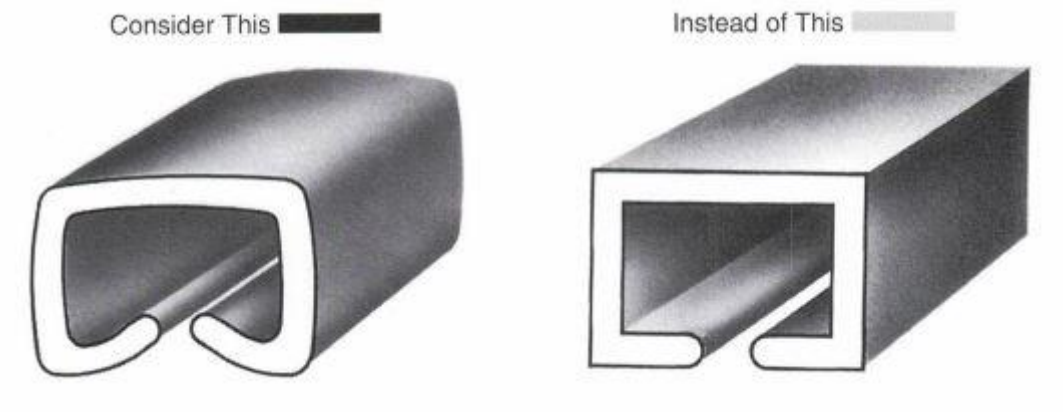

Reduce Area of Void —2

Here wall thickness has been increased to reduce void area. Though more metal is used per metre of extrusion, the price per metre may be lower, depending on particulars.

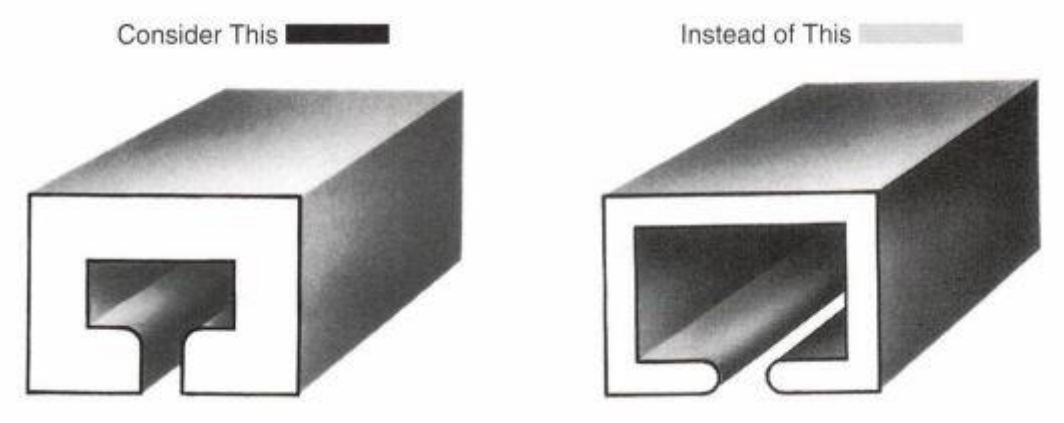

Widen Opening into Void

Better than the four previous suggestions, widening the opening into the void classifies this shape as a semi-hollow and cuts production costs measurably. The die no longer has a fragile tongue.

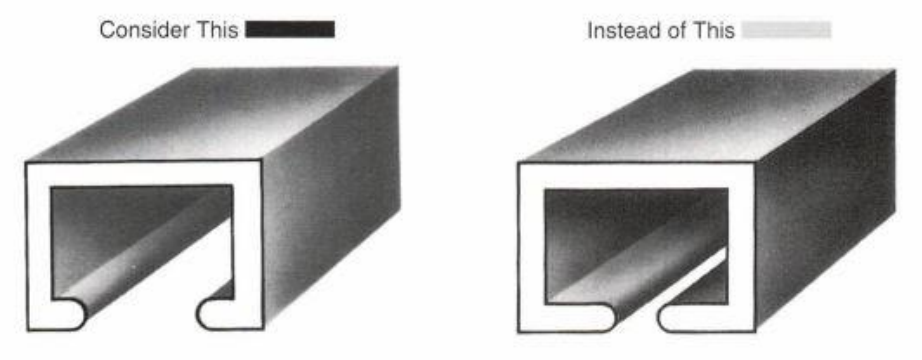

Avoid Knife Edges — 1

A knife edge when extruded will appear wavy. Change the profile to a blunt or rounded point.

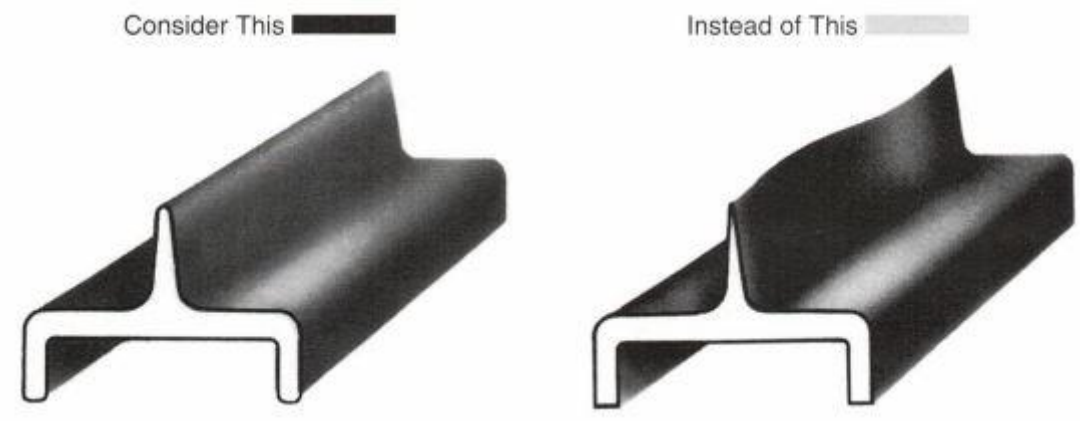

Avoid Knife Edges —2

Serrations on a step plate should be rounded rather than sharp, to retain a good appearance for a longer time.

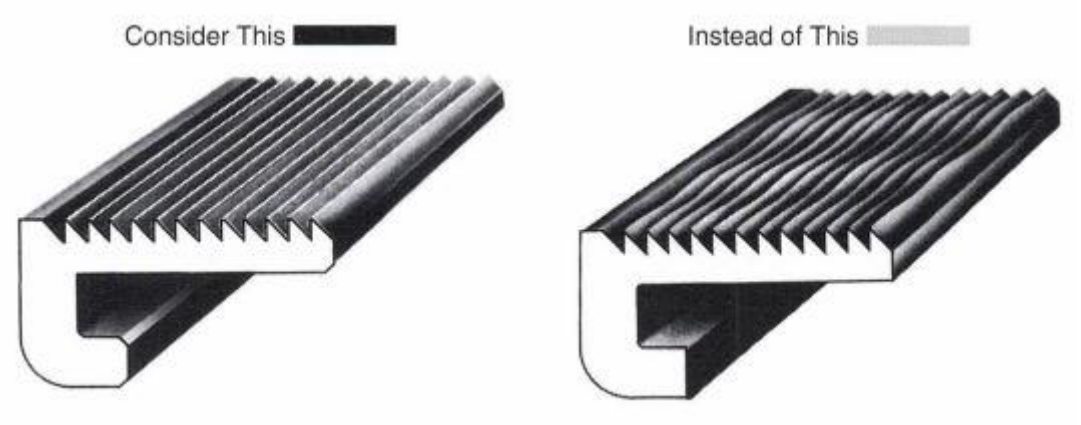

Built-In Indexing Mark

Shallow extruded grooves make drilling, punching, and assembly easier by eliminating the need for centre-punching. Index groove can also be used to help identify pieces that are similar in appearance, or to distinguish an inside surface from an outside surface.

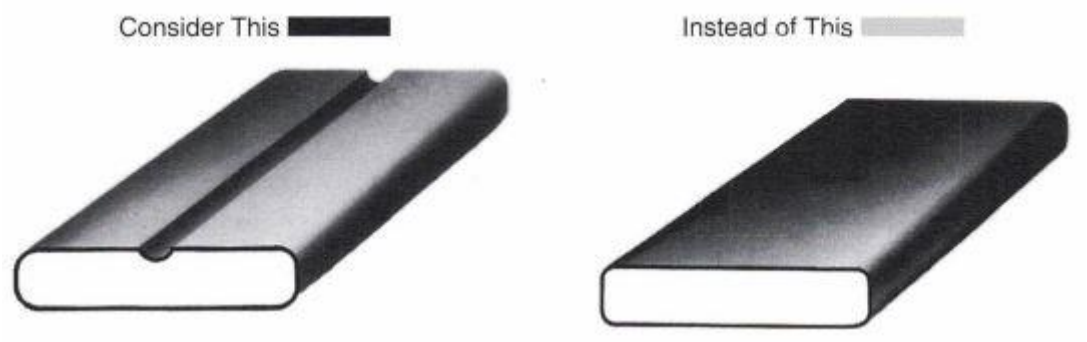

Designing for Ease of Assembly

In many instances an aluminium extrusion will be part of a more complex structure and the designer can make assembly easier and more efficient by providing for it in the design.

Extrusions can be designed for joining by a wide variety of methods such as riveting, bolting, welding, brazing, soldering and adhesive bonding. They can also be designed to fit, hook, or snap together with mating parts. Hinges or slides can often be designed-in as integral parts of extrusions, eliminating the need for additional assembly and moving parts.

Eight types of extruded joints are discussed in this section:

- **Nesting Joints.**
- **Interlocking Joints.**
- **Snap-Fit Joints.**
- **Three-Piece, Blind-Fastened Joints.**
- **Combination Joints.**
- **Slip-Fit Joints.**
- **Key-Locked Joints.**
- **Screw Slots.**

Nesting Joints

Nesting joints, which include lap joints and tongue-and-groove joints, have mating elements that are shaped to be assembled with little or no self-locking action. They serve primarily to align adjoining parts and usually depend on rivets, bolts, adhesives, confinement within a rigid frame, or other fasteners, to hold them together.

Lap Joints
The lap joint is the simplest form of nesting joint.

A lap joint between two identical extrusions (one inverted on the other).

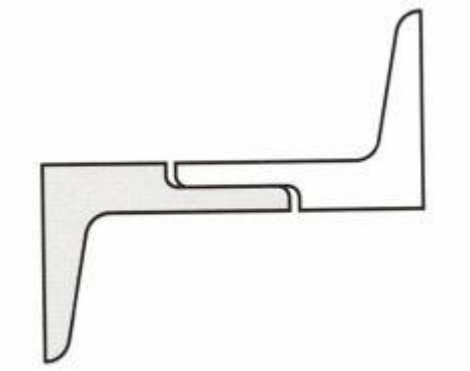

Lap joints between a sheet or plate and an extruded flat angle (left) or stepped angle (right).

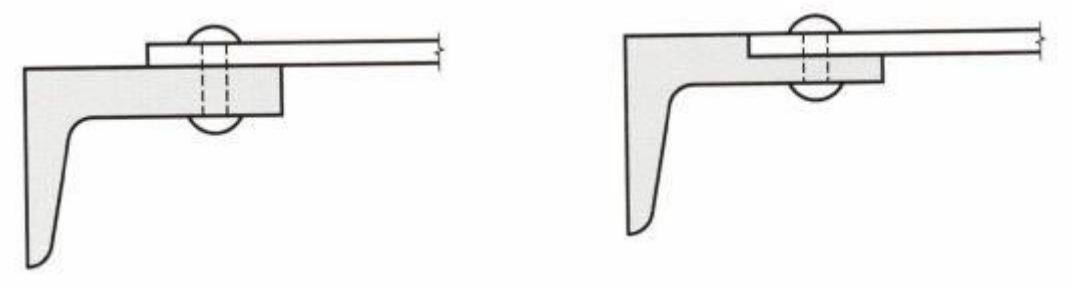

Horizontal Tongue-and-Groove Joints

The horizontal tongue-and-groove joint resembles the familiar carpentry joint of the same name. One of its parts has a groove which receives a tongue on the other part, shaped to fit snugly. The term “horizontal” has nothing to do with the joint’s position in space but means that the direction of the tongue-and-groove lies parallel to the broader surfaces of its elements. This type of joint is very effective in keeping surfaces of adjoining members parallel.

Care should be taken to minimize re-entrants in the groove and attention should be paid to clearances and flatness tolerances.

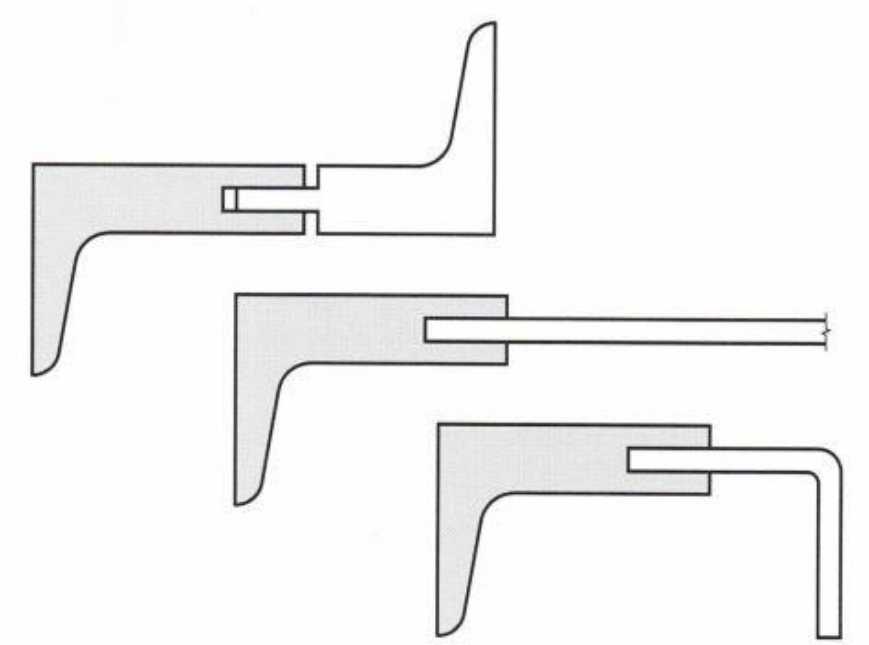

Horizontal tongue-and-groove joints between two extruded angles (top) and between extruded angles and sheet (below).

Vertical Tongue-and-Groove Joints

The vertical tongue-and-groove joint has its tongue and groove perpendicular to a relatively broad surface of one of its members. It can be designed for high resistance to separation. Three variations of this joint are shown below.

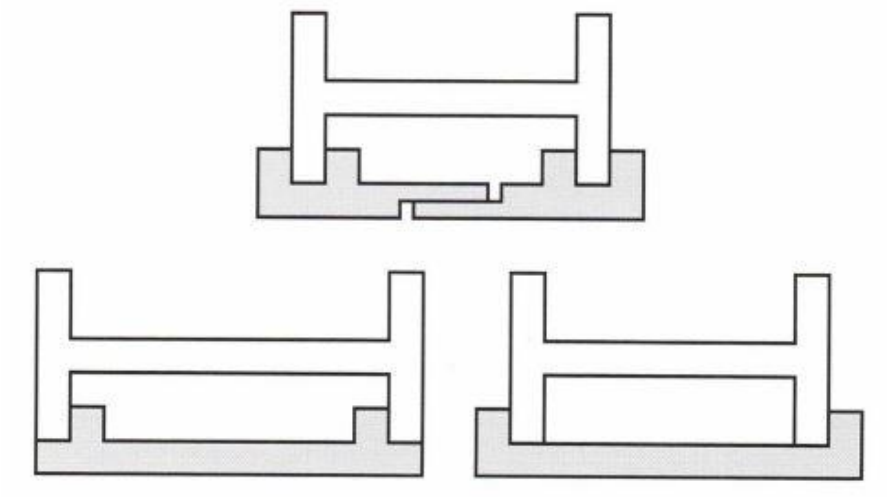

If joint locking is not required, the tongue and groove can be shallow. Alternatively, the tongue and groove may be made deep enough to be locked with adhesives, rivets, or other fasteners, to create a joint with great strength.

Attention should be paid to straightness tolerances over the engaged length.

Interlocking Joints

The interlocking joint is, in effect, a modified tongue-and-groove joint. But instead of being straight, the two mating elements are shaped so that they cannot be assembled or (more to the point) disassembled by simple straight-line motion. They are assembled by a rotating motion and will not separate without a corresponding counter-rotation. As long as the parts are held in their assembled position, they strongly resist separation and misalignment in both the horizontal and vertical directions.

The amount of rotation required for interlocking assembly depends on the geometry of the design. It can be made more or less than 45°, as long as the design allows enough clearance for the required rotation.

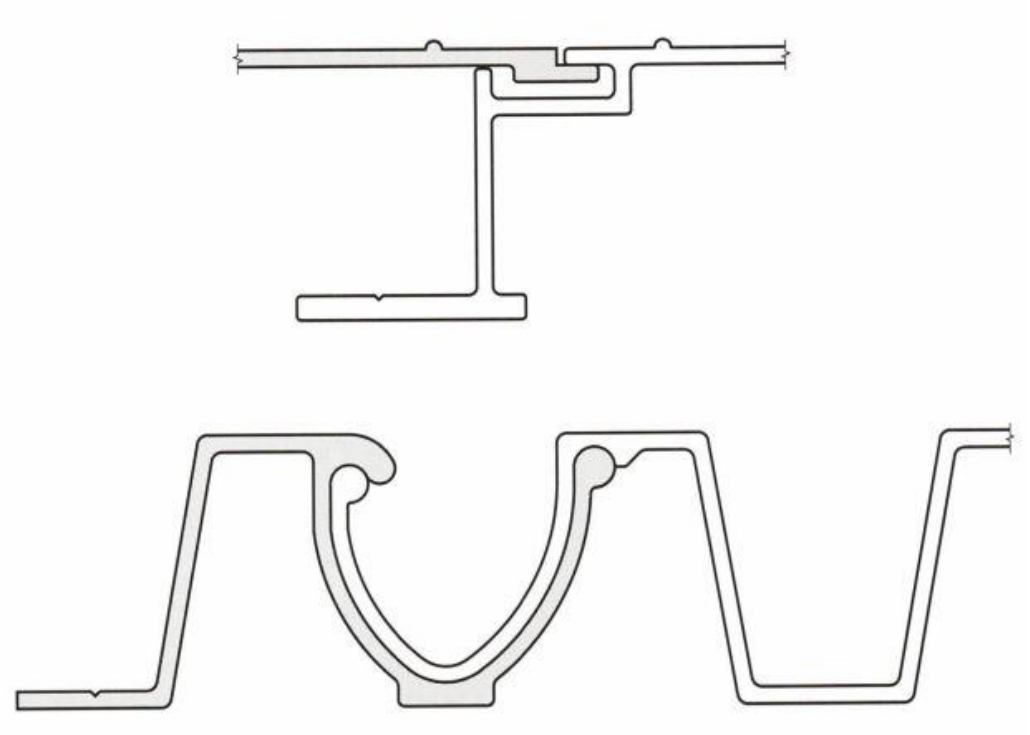

Interlocking joints can be secured after assembly in at least five ways, all based on preventing counter-rotation:

— Fastening the elements to structural cross-members.
— Restraining the assembly within a rigid frame.
— Restraining the assembly with channel end-closures.
— Fastening the joint with rivets, welds, adhesives, or other devices.
— Providing a folding, locking flange, as shown below.

An interlocking joint with a folding, locking flange which prevents counter-rotation and disassembly.

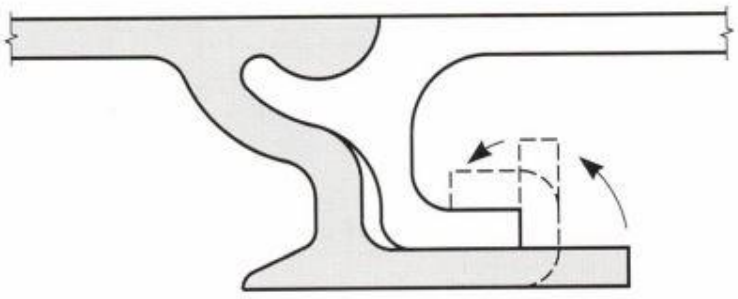

Snap-Fit Joints

A “snap-fit” or “snap-lock” joint is one which is self-locking and requires no additional fasteners to hold the joint together. The mating parts of a snap-fit joint exert a cam action on each other, flexing until one part slips past a raised lip on the other part. Once past this lip, the flexed parts snap back to their normal shape and the lip prevents them from separating. After it is snapped together, this joint cannot be disassembled unintentionally.

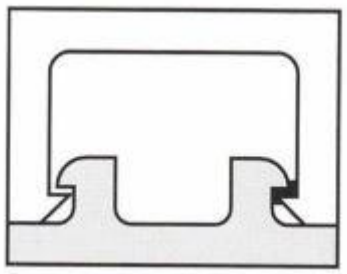

The strength of this joint can be increased by applying adhesive to the mating surfaces before assembly. Even short lengths of an adhesively bonded snap-fit joint cannot be easily slid apart. Precise dimensions are critical in a snap-fit joint. Initial design drawings should give nominal dimensions only for snap-fit joints, leaving the determination of the precise final dimensions to an experienced extrusion designer who is fully conversant with snap-fit production requirements.

Three-Piece, Blind-Fastened Joints

A three-piece interlocking joint can be designed with a blind (hidden) fastener interlocking the two principal extrusions. Such a design presents one side with a smooth appearance and no visible mounting hardware, as shown in the example below.

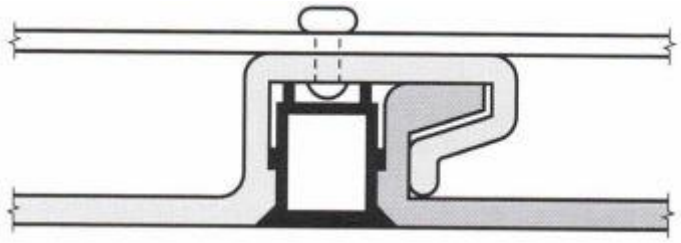

Combination Joints

Nesting, interlocking and snap-fit joints can be combined in the same extruded assembly. For example, snap-fit elements can be easily combined with rotating elements.

In the example below, a single extruded shape is designed for mating with identical parts which are rotated into assembly and then snap-locked rigidly into position without auxiliary fastening. The tight surface-to-surface contact in this design also provides resistance to sliding between the parts. The hat-like section created by assembly of the parts serves as an integral stiffener, increasing structural strength. Multiples of this single extruded shape can be assembled to form a modular panel with considerable strength.

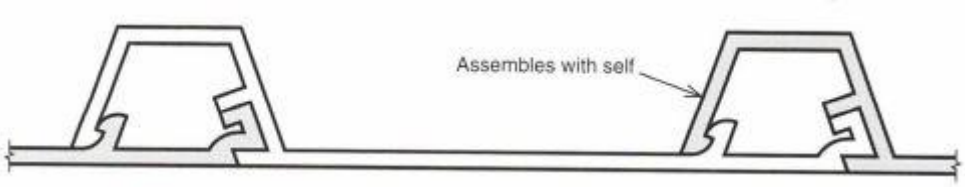

Combinations of nesting and interlocking joints incorporate the long mating surfaces of the interlock and the additional surfaces of the double nest, to provide an excellent base for adhesive sealants and for mechanical fastening. With such combination joints, modular building panels or other units can be pre-assembled at a factory, then mechanically joined into a complete structure on site.

Slip-Fit Joints

Slip-fit joints, which include **dovetail joints, push-fit joints and hinge joints**, are assembled by sliding or pushing two extruded mating parts together.

Dovetail Joints
Dovetail joints are generally close-fitting and rigid and are assembled by sliding the two mating parts together in the direction of their length. They are useful in many products where a simple, strong, permanent connection is required. Two variations of dovetail joints are shown below.

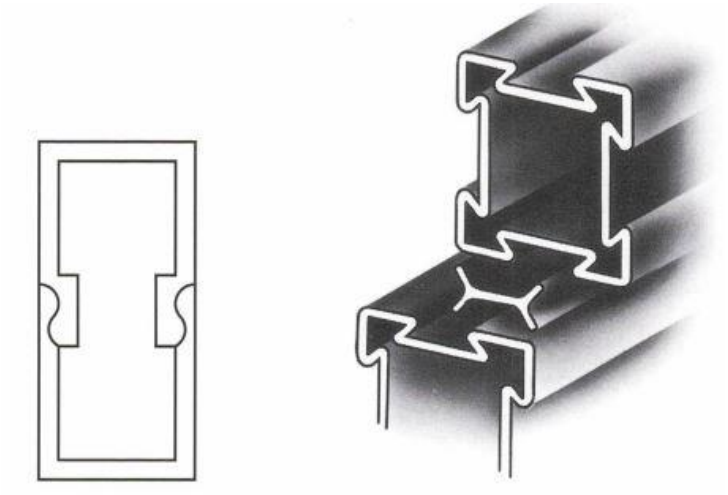

Push-Fit Joints
Sometimes sections can form an assembly by simply pushing together. This is very useful where allowance has to be made for small relative movement such as occurs with thermal expansion. Care has to be taken with tolerances on flanges etc. which come into close contact, in order to ensure that there is sufficient clearance over their engaged length.

To prevent the extrusion from rattling and also to provide a seal, extruded soft plastic gaskets are often used to fill the gap between the components. One of the extrusions is designed with a dovetail or tee slot to accept the gasket and the gasket is designed to fill the clearance between the sections and to take up any variation due to tolerances. The mating extrusion has a flat surface to seal against the gasket and, to assist in assembly, a “lead-in” is provided along the contact edge.

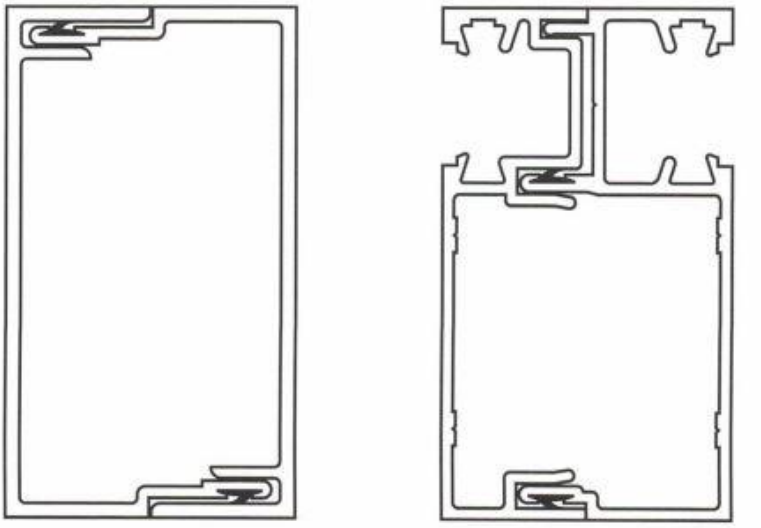

Hinge Joints

Hinge joints have a cross-section with a ball-and-socket shape that allows them to rotate freely without separating and are assembled by sliding the two mating parts together in the direction of their length. Hinge action through 60 to 90° is easy to obtain and by incorporating adequate reinforcement, hinge joints may be designed to rotate beyond 90°. Since the hinge joint is relatively loose, provision should be made to prevent slippage in the direction of its length.

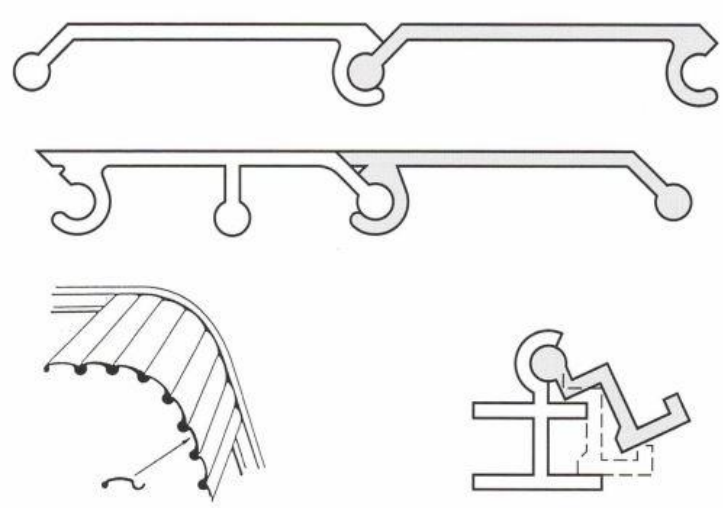

Key-Locked Joints

These unusual joints have two or more primary elements which are locked together only when an additional specialized part, the “key”, is slid into position.

The unique key-locked joint shown here is used to connect two or more panels. In the illustration, two panels and their extruded joining elements are seen edge-on from the top or bottom. The three hook-profiled extrusions nest together but are not in fact joined until an extruded pin with a special profile is inserted into the space at the centre, locking them in place.

Keyed interlocks of this type permit rapid, easy assembly and disassembly, making them particularly adaptable to temporary and portable installations, as well as to relatively permanent structures.

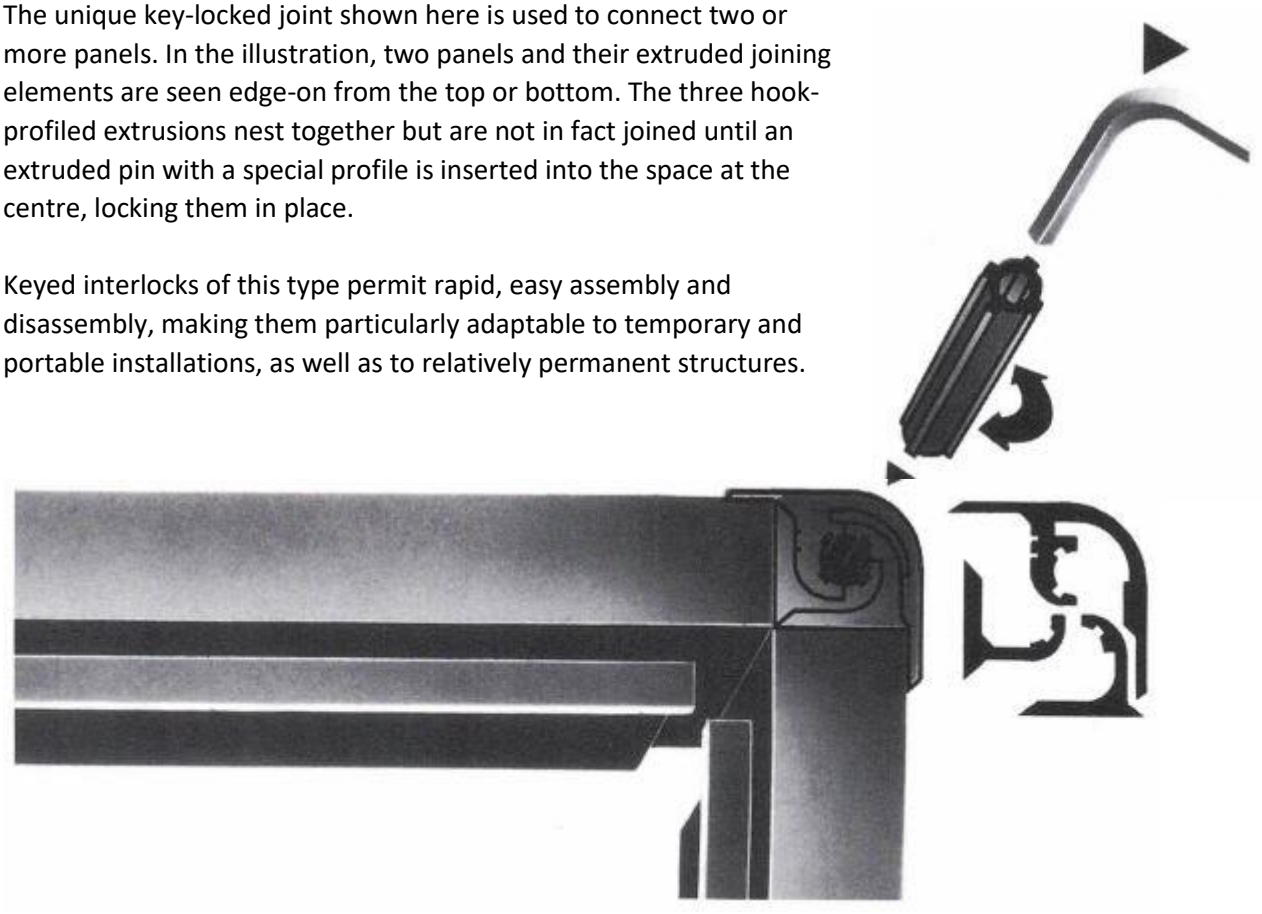

Screw Slots

Screw slots are often used to facilitate the assembly of aluminium extrusions. Standard screw slots are detailed below and should always be used with self-tapping screws. The screw slot should be designed so that the area of the void and the metal thickness surrounding it are symmetrical about the centre line of the gap.

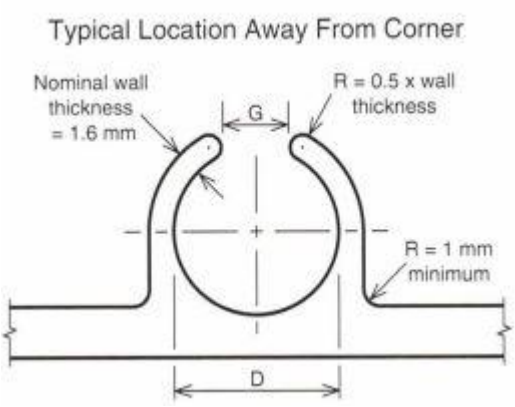

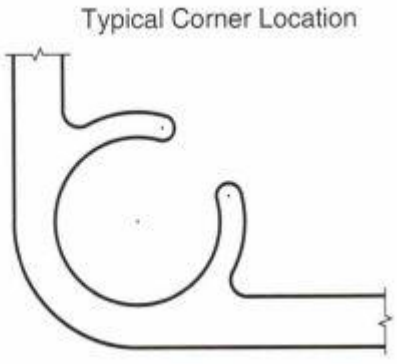

Self-Tapping Screw Gauge (mm)	D (mm)	G (mm)
4	2.8	1.9
6	3.2	2.0
8	3.7	2.3
10	4.3	2.8
12	4.9	3.0
14	5.6	3.3

The provision of relief at the back of a screw slot moves the centre of the screw away from the panel face. This is sometimes necessary when the head of the screw must not project beyond the panel face. It also assists with centring the screw in the slot.

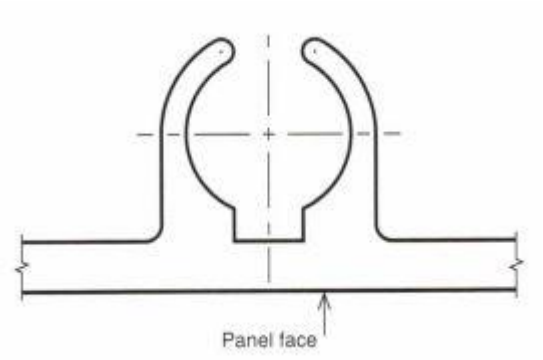

Designing for Fabrication

Aluminium lends itself to a variety of fabrication processes and the ease of forming, machining and joining aluminium extrusions is an important advantage in fabricating more complex structures. This section describes these fabrication characteristics in general terms.

Forming

Extruded aluminium tube, pipe and shapes can be formed on conventional bending equipment. The minimum bending radius of a specific extrusion will depend on its size, its alloy and temper, the complexity of its shape and the characteristics of the available equipment.

An alloy is usually selected for reasons other than the demands of forming. But when formability is a significant question, several properties of the alloy and temper should be considered, including elongation, hardness and the spread between yield strength and ultimate strength. Alloys with high elongation, low hardness and maximum spread between yield and ultimate strength are the easiest to form.

The alloy's temper also governs its formability. The softer tempers are more easily formed than the harder ones.

An alloy may be heat-treatable or non-heat-treatable and each has certain limitations and advantages in formability, some of the heat-treatable alloys can be formed first and then heat treated after forming to enhance mechanical properties.
Warm forming can ease the bending of some alloys, with minimal effect on their mechanical and metallurgical properties. This process requires careful time and temperature control.

Machining

Aluminium extrusions may be machined rapidly, with some modification of conventional practices. Smooth surfaces can be obtained by finishing the cutting tools with considerably more side and top rake than is used for cutting most other metals. In particular, the softer alloys such as 3003 and 6060 require large rake angles and light cuts.
Water soluble lubricants or oil-based cutting lubricants can be used in machining aluminium.

Joining

Aluminium extrusions may be joined by most standard metal joining methods. Fabrication may be further simplified by thoughtful design features. For example:

- As an aid to riveting, a guideline can be extruded into the surface to mark the precise location of the rivet line.
- Butt and bevel welding can be facilitated by incorporating the weld preparation (a V, U or J groove) in the extruded shapes.
- Screw slots can be incorporated in the extruded shape to eliminate drilling and tapping.
- Special shapes can be extruded to simplify the joints of plate assemblies and to eliminate stress concentrations.

The Economics of Extrusion Design

The economics of an extrusion design are influenced by several important variables, including:

- Production Quantity.
- Product Shape.
- Tolerances.
- Alloy.
- Surface Finish.
- Length.
- Value Analysis.

Even after production is under way, it is a good idea to review these variables occasionally. It is sometimes possible to achieve savings by revising a design to suit changing circumstances, as discussed below.

Production Quantity

Even in short production runs, aluminium extrusion may “break even” and become more economical than alternative processes, particularly when secondary savings such as reduced machining, finishing and assembly are factored in.

A product may be manufactured initially using standard extruded shapes, but as product volume increases, it often becomes more economical to redesign components as custom extrusions matched more precisely to product needs. At large volumes, manufacturers can benefit from the volume-prices available on large mill runs of a shape.

Sometimes several low volume items, with minor differences in structural properties and weight, can be redesigned as a single multi-purpose extrusion, gaining the price advantage of larger volume mill runs.

Product Shape

Shape also influences product economics. In general (although not always), semi-hollow extrusions are more economical than hollows, solid shapes are more economical than semi-hollows and symmetrical shapes are more economical than asymmetrical shapes.

However, extrusions can often save a manufacturer money in hidden ways. A more complex extrusion may be well worth some moderate expense for the savings it creates in reducing machining, forming, joining, assembling, shipping or other costs.

It may also be worthwhile to redesign an extruded shape when an essentially “one-design” product is scaled up in size. Extruded aluminium yacht masts provide an example of this factor. At the most popular sizes most masts are hollow extrusions, but larger sized masts cross an economic threshold. Large hollow shapes are more costly to produce and their production runs are smaller. It is frequently more economical to produce the two halves of a large mast as if it were split down the middle (in separate solid-shape extrusions) and then assemble them into the complete hollow mast.

Tolerances

Extrusions produced to industry-standard tolerances are more economical than those requiring special tolerances. Product fabrication and assembly techniques sometimes change, making special tolerances less necessary. Periodical review of an extrusion design may reveal an opportunity to reduce costs by easing or eliminating special tolerances.

Alloy

For an extrusion design there may be several alloys and tempers that would be suitable for production. The selection is usually made on the basis of structural or fabrication requirements, but it should also include a search for the most economical alloy among the several that may be functionally equivalent for the specific application at hand.

Surface Finish

Careful production, handling and shipping can deliver extrusions with premium quality surface finishes. However premium finish may not be needed on all faces of an extruded shape and as circumstances change, the need for premium finishes may diminish or disappear. On review of an extrusion design, it may be possible to reduce or eliminate premium finish specifications.

Length

At relatively low product volumes, fabricators often purchase extrusions in economic warehouse lengths. As production volume increases savings may be gained by purchasing extrusions in the exact required lengths, or multiples of the required lengths, to reduce scrap generation.

Value Analysis

Although basic material cost is important, it should be balanced against the total cost of fabrication and subsequent service performance. This is particularly relevant to aluminium extrusions, which can be produced in shapes that require little or no further fabrication and from aluminium alloys that have characteristics suitable for a wide range of applications.

Aluminium extrusions are usually sold by weight, which tends to encourage their comparison with other materials on a straight weight/cost basis. However, it is unrealistic to compare aluminium with steel on this basis since, when meeting equal deflection requirements, an aluminium/steel weight ratio of 1:2 is easily achieved and the aluminium product has the advantage of being much stronger. (It can withstand a much higher level of stress before failure.) For example, the two beams shown below have been designed so that they are of equivalent stiffness about the XX and YY axes. The yield strength of the aluminium beam (extruded from alloys 6061 T6 or 7005 T53) is more than twice that of the mild steel beam.

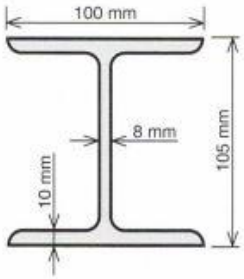

Mild Steel Beam 21.7 kg/m



Aluminium Beam 10.6kg/m

An examination of alternative profiles can frequently result in a section shape that is cheaper to produce. Illustrated below are two sections (centre and right) that have been designed to provide good strength and stiffness about both major axes. They are less expensive to extrude than the conventional hollow rectangular section (left).

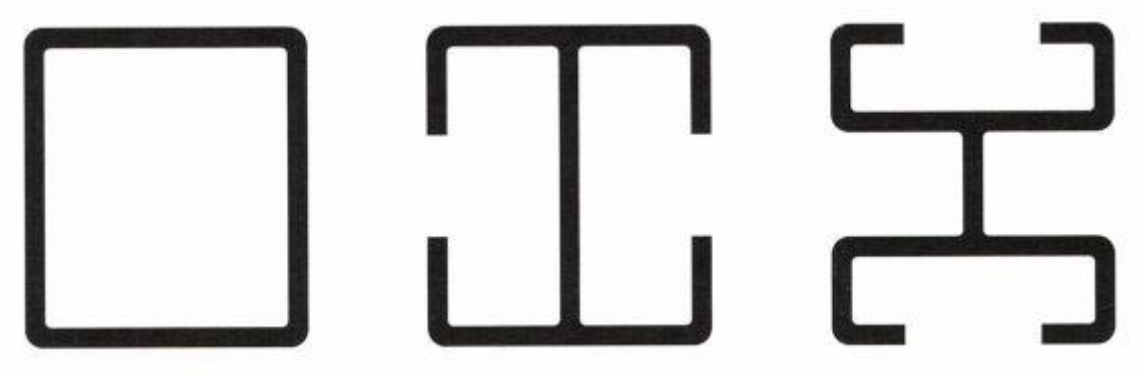

Extrusion Alloys And Their Typical Applications

Below are the alloys generally extruded in Australia. Other alloys designed for special applications such as the aeronautical and space industries are usually sourced from overseas.

Alloy	Corrosion Resistance[3]	Machining[2]	Anodising[2]	Weldability Inert Gas Weld	Typical Applications
6060	A,A	C,C	A,A	A	Architectural and general-purpose extrusions
6063	A,A	C,C	A,A	A	Furniture, architectural extrusions, general purpose extrusions.
6463A	A,A	C,C	A,A	A	Trim extrusions requiring decorative finishing
6106	A,A	C,C	A,A	A	General purpose extrusions, light structural applications
6005A	A,A	B,C	B,B	A	Structural applications, transport, marine
6061	B,B	B,C	B,B	A	Structural applications where corrosion resistance is needed. Transport applications and marine
6351	A,B	B,C	B,B	A	Heavy-duty structures where corrosion resistance is needed. Transport applications and marine.
6082	A,B	B,C	B,B	A	Heavy-duty structures where corrosion resistance is needed. Transport applications and marine.
7005	C	B,B	B,B	A	High-strength welded structures. For specific corrosive environments, contact material supplier.

Footnotes:

[1]Relative ratings in decreasing order of merit = A, B, C, D. Where applicable, ratings for both annealed and hardest temper are given. For example, A,C.
[2]Rating indicates suitability of alloy for decorative quality anodising.
[3]All aluminium alloys can be anodised for increased corrosion and wear resistance.

Extrusion Bending

Bending Machine Types

There are several types of forming machine suitable for bending aluminium sections. The choice depends upon the class of section, whether solid, open or hollow; the range of support tooling available; the alloy and the temper. Bending may be carried out by four main methods as shown in Figure 10 below.

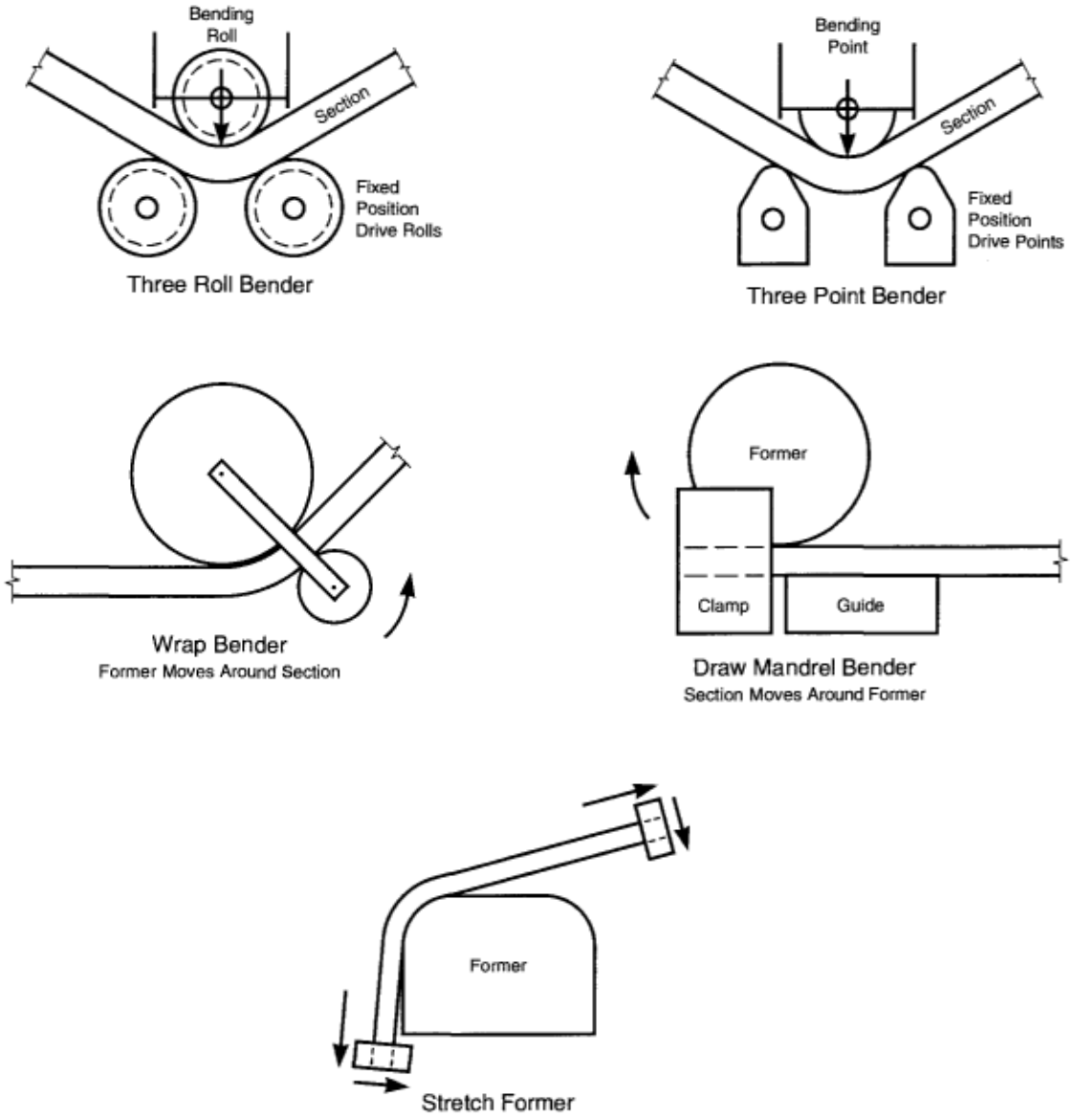

Figure 10: Bending Methods

The three roll bender has a central moveable roller which is gradually depressed until the desired radius is obtained. The three point bender has a similar method of operation, the load being either applied gradually or impacted. The roll and point methods of bending are usually applied to robust sections.

In both wrap and mandrel benders, it is possible to provide formers and other support tools which minimize the amount of buckling and enable tighter radii to be obtained.
As the name implies, the stretch former puts the section into tension and then, moving laterally, wraps it around a former. This method reduces the likelihood of compression failure.
In addition to these basic machines, several specialized bending machines are also available. For example, the rotating disc bender is particularly suitable for tube bending.

Alloys And Tempers

Heat treated aluminium alloys in the T6 temper have relatively short plastic ranges, with yield strength/ultimate strength ratios of 0.86:1 and minimum elongation values of 7% to 10%. Although these values do not provide a complete picture of ductile performance, they give a reliable indication of bendability. Where bending is a primary requirement, it is usual to use material in the T4 solution heat-treated condition. The plastic range is improved, with yield strength/ultimate strength ratios being typically 0.6:1 and minimum elongation values 14% to 16%. The slow rate of natural ageing in 6000 Series alloys does not appreciably affect their bending characteristics, except in the most severe bending cases.

Bending at raised temperatures is not usually recommended since the temperature elevation changes the mechanical properties of the alloy. It is possible to carry out post-bending heat treatment on T4 temper material to increase its properties towards those of the T6 condition. However, care should be taken with thin sections as this treatment may cause distortion.
The bending characteristics of the aluminium alloys most frequently used in the extrusion industry are given in Table 4 below.

Table 4: Alloy Bending Characteristics

Alloy	Temper	Bending Characteristic
6060, 6063, 6463A	T1 T5	Very Good Good
Include 6106	T4 T6	Very Good Good
6005A, 6061, 6082, 6351	T4 T6	Good Fair
7005	T593	Fair

Shape Factors

The complexity of shapes available in aluminium alloys makes it very difficult to provide information covering every situation. By considering the behaviour of the various elements of a shape in relation to the axis of bending, it is possible to predict the most likely mode of failure of a section when it is

bent through too tight a radius. In most cases the neutral axis of a section and the axis of bending almost coincide. However, this is not true for stretch forming, where the axis of bending usually moves outside the section as a result of the applied longitudinal tension.

Table 5 below gives minimum bending radii for the web and flange elements of a section subject to bending. Two possible modes of bending failure — tensile failure and compressive buckling failure — are considered for each element type.

Table 5: Minimum Bending Radii for Web and Flange Elements of a Section Subject to Bending

Radii are measured to the neutral axis of the section and are expressed in terms of y.

y = the maximum distance from the outer fibres of the element to the neutral axis of the whole section.

t = the thickness of the element.

w = the width of a flange.

Flange = an element perpendicular to the plane in which bending occurs. Denoted by 

Web = an element parallel to the plane in which bending occurs. Denoted by 

Web – Tensile Failure

Alloy	Temper	Min Bending Radii						Typical Sections
		y/t	1	2	4	8	12	
6060, 6063	T1		0.7y	0.7y	0.8y	2.0y	3.5y	
	T5, T6		0.8y	0.8y	1.4y	3.5y	7.0y	
6005A, 6061,6082	T4		2.5y	2.5y	2.5y	3.0y	5.0y	
	T6		2.5y	2.5y	2.5y	3.5y	7.0y	

Web – Compressive Buckling Failure

Alloy	Temper	Min. Bending Radii					Typical Sections
		y/t	1	2	4	6	
6060, 6063	T1		1.0y	3.5y	8.0y	20.0y	
	T5, T6		1.0y	4.0y	10.0y	20.0y	
6005A, 6061, 6082	T4		1.8y	4.0y	10.0y	20.0y	
	T6		1.8y	5.0y	10.0y	25.0y	

Flange – Tensile Failure

Alloy	Temper	Min. Bending Radii					Typical Sections
		w/t		4		8	
6060, 6063	T1			7.0y		8.0y	
	T5, T6			10.0y		10.0y	
6005A, 6061, 6082	T4			8.0y		8.0y	
	T6			10.0y		10.0y	

Flange – Compressive Buckling Failure

Alloy	Temper	Min. Bending Radii w/t		4		8	Typical Sections
6060, 6063	T1			5.0y		8.0y	
	T5, T6			8.0y		20.0y	
6005A, 6061, 6082	T4			7.0y		12.0y	
	T6			8.0y		20.0y	

NOTE: 1. For bulb flanges with bulb diameters greater than 3 times the flange thickness, multiply the minimum bending radii by 0.6.
2. In the compressive buckling mode, the use of support tooling can reduce the minimum bending radii below the values shown. The extent of the reduction depends on the type of tooling used.

TUBE BENDING

The recommended methods of tube bending are wrap and draw mandrel. Although three-point bending can be used, there is less control, particularly with thin-walled tubes in the stronger alloys and tempers. Aluminium tubes can be readily bent but, like all materials, there are limits and the key to successful bending is to understand them and to take appropriate action at both the design and fabrication stages.

Failure modes are tensile tearing and compressive buckling, but there are in-between situations where wrinkling, necking and flattening can occur without causing fracture of the tube. To prevent these surface defects, or to restrict them to an acceptable level, the tubes can be filled with sand, springs or low melting materials such as Wood's metal. These are all established methods of providing internal support which, together with the use of external groove formers and followers, provide the maximum level of bending control.

Graphs 2 and 3 below give the minimum bending radii of round tube for three commonly used aluminium alloys.

Minimum Inside Bending Radii (r) for Round Tube — Wrap and Mandrel Bending

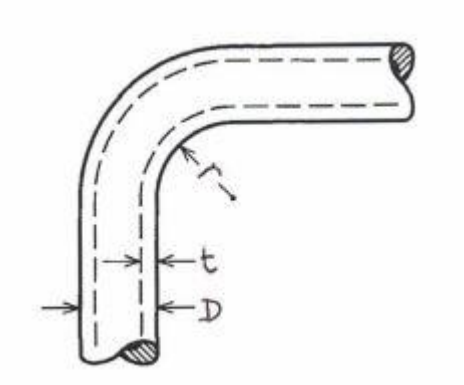

Where D = outside diameter of tube (mm)
t = wall thickness of tube (mm)
r = inside radius of bend (mm)

Graph 2: Mandrel Bending

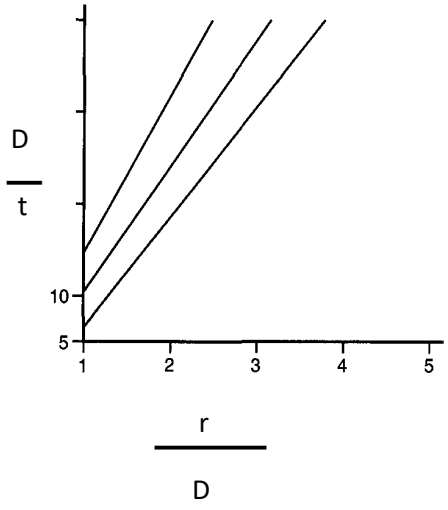

Graph 3: Wrap Bending

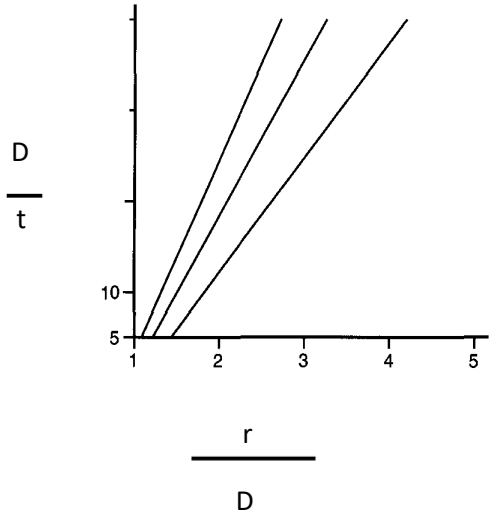

Where the characteristic lines B, C and E give the relationship for several alloys and tempers and are defined as follows:

Line	Alloy and Temper			
B	6060 - T1	6063 - T4		
C		6060 - T5	6005A - T4	6101 - T6
E		6106 - T6	6005A - T6	

SPRINGBACK

Although the degree of springback can be calculated for a specific section that has been bent around a given radius, it involves a lengthy process. The more usual method of establishing springback is to carry out trials prior to a production run. Sections which are symmetrical, and which have the major portion of their material away from the neutral axis generally exhibit less springback than a heavy-centred cruciform section or an asymmetrical T section.

LUBRICATION

Friction between the surfaces of steel forming tools and the natural surface oxide of the aluminium creates the need to lubricate both work and tools. This helps to reduce tool wear and prevent damage to the surface finish of formed parts. Depending upon tool shape, section size and alloy, the lubricants commonly used include mineral oil, lard oil, proprietary water-soluble compounds and waxes.

Recommended Bending Radii For Round Tube

Table 6: Recommended Minimum Inside Bending Radii (r) for Selected Sizes of Round Tube — Mandrel Bending[1,2]

TUBE SIZE		Radii for Various Alloys and Tempers (mm)				
Outside Diameter (mm)	Wall Thickness (mm)	1200 - O 1350 - O	6106 – O 6060 – O 6063 – O 6061 – O 6351 -O 6082-O	6106 - T4 6061 - T4 6351 - T4 6063 - T4 6082-T4	6060 - T5&T6 6063 - T5&T6 6101 - T5&T6 6106 - T6	6005A - T6 6061 - T6 6351 - T6 6082-T6
10	1.0	12	15	16	18	20
	1.6	10	13	14	16	18
12	1.0	16	16	18	22	25
	1.6	12	15	17	20	23
16	1.0	19	22	30	32	35
	1.6	17	20	23	26	32
20	1.0	25	28	38	40	50
	1.6	22	25	32	32	40
25	1.2	38	45	50	56	62
	1.6	35	45	46	50	56
	3.0	30	42	40	45	52
28	1.2	45	54	60	68	84
	1.6	42	50	54	58	64
	3.0	34	40	42	45	50
32	1.2	54	62	80	80	100
	2.0	42	48	58	60	80
	3.0	38	42	46	52	60
40	1.6	64	72	90	95	120
	2.0	56	64	80	80	100
	3.0	48	54	60	70	80
50	1.6	90	112	125	140	175
	2.0	84	98	110	126	150
	3.0	70	80	95	110	125
	4.0	68	70	80	90	120
60	2.0	110	120	150	170	220
	3.0	100	105	120	130	180
	4.0	85	90	100	120	150
	6.0	70	80	90	100	130
80	2.0	165	190	220	240	340
	3.0	140	170	185	200	250
	4.0	135	150	160	180	220
	6.0	120	130	140	160	200

Footnotes: [1] It is recommended that test bends be carried out before final selection is made.
[2] For other sizes of tube, see Graphs 2 and 3 on page 51.

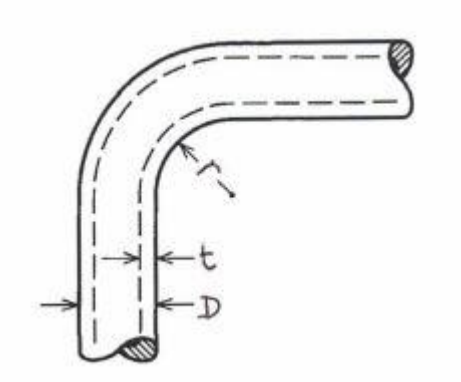

where D = outside diameter of tube (mm)
t = wall thickness of tube (mm)
r = inside radius of bend (mm)

Surface finishing

One of the most important considerations of surface finishing is the need to have a sound and permanent bond between any applied film or coating and the parent material. Aluminium and its alloys satisfy this requirement particularly well, since they provide an integral bond with anodising and, when suitably degreased and etched, an excellent key for paint coatings.

PRE-TREATMENT

The surface textures on aluminium, like those on other metals, are visible through all but the thickest coating and this aspect should be considered before deciding on the final surface treatment. Positive relief features, such as ribbing or serrations, may be easily incorporated in the extruded shape. Surface pre-treatment usually commences with a degreasing dip, which is then followed by a rinse and an etch dip. The chemical composition and concentration of the etch can be varied to produce a range of surface textures designed to affect the final appearance of an anodised finish. The textures can be graded from a natural metal appearance, through a light grey satin finish, to a darker grey frosted appearance.

Specialized surface treatments may be applied, such as chemical brightening, mechanical polishing, scratch brushing and shot or vapour blasting. They produce finishes which range from bright reflective polished surfaces to heavy peened rough textures.

With correct pre-treatment procedure, aluminium provides an excellent surface for paint. After degreasing, a light etch is usually followed by a chemical conversion coating to improve the adhesion of paint with the aluminium substrate.

The pre-treatment chemicals used are generally of a concentration which makes them unsuitable for manual non-dip application.

ANODISING

Anodising is a controlled oxidation of the aluminium surface achieved by immersion in an electrolyte (usually dilute sulphuric acid). In the process, aluminium is used as an anode and a low voltage, high amperage, direct current is passed through the metal. A hard, inert oxide film initially forms on the aluminium surface and is followed by a less dense oxide layer in which there are capillary pores. The capillary pores allow oxidation to proceed further, building up the film thickness from the base. The oxide film is an integral part of the aluminium surface and is not an applied coating.

After anodising, the oxide surface film is porous and in a condition to accept colouring agents if required. The film may be coloured using organic dyes (as used with textiles) to give a range of primary colours, or it may be impregnated with inorganic pigments obtained from metallic salts to provide colours varying from grey to light yellow tinge through bronze, dark brown and black. Organic dyes tend to remain at the top of the surface pores, whereas the inorganic pigments obtained from metallic salts are drawn to the bottom of the pores by applying a current. See Figure 11.

The final stage for both natural finish and colour anodising involves sealing the pores against further moisture penetration and locking the colouring pigments from leaching back out. Sealing is achieved by immersing the anodised component in hot water or by immersing in a nickel fluoride solution at ambient temperature. The immersion time is dependent on the anodic film thickness.

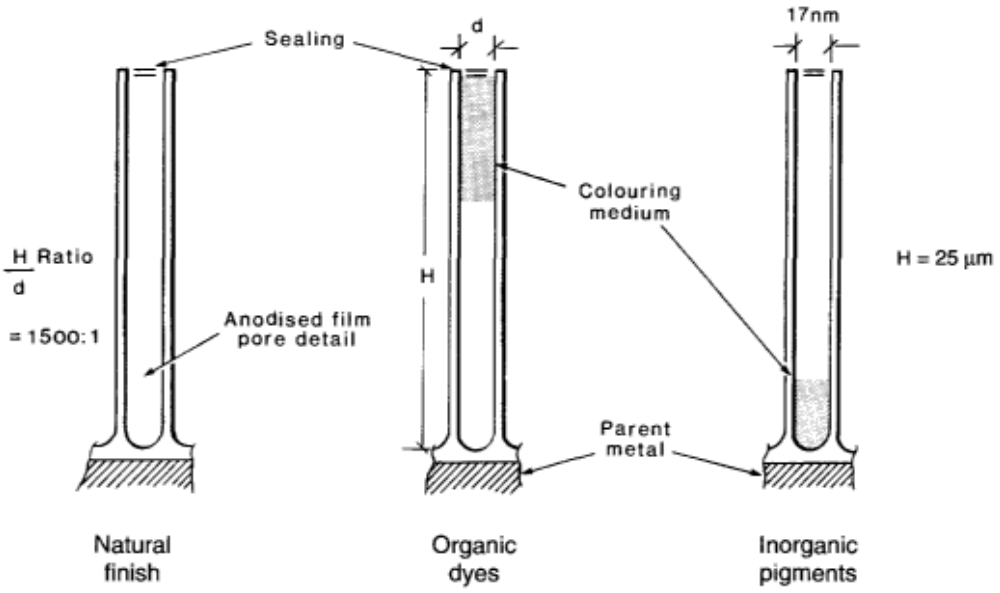

Figure 11: Deposition of Colouring in Anodised Film Pores

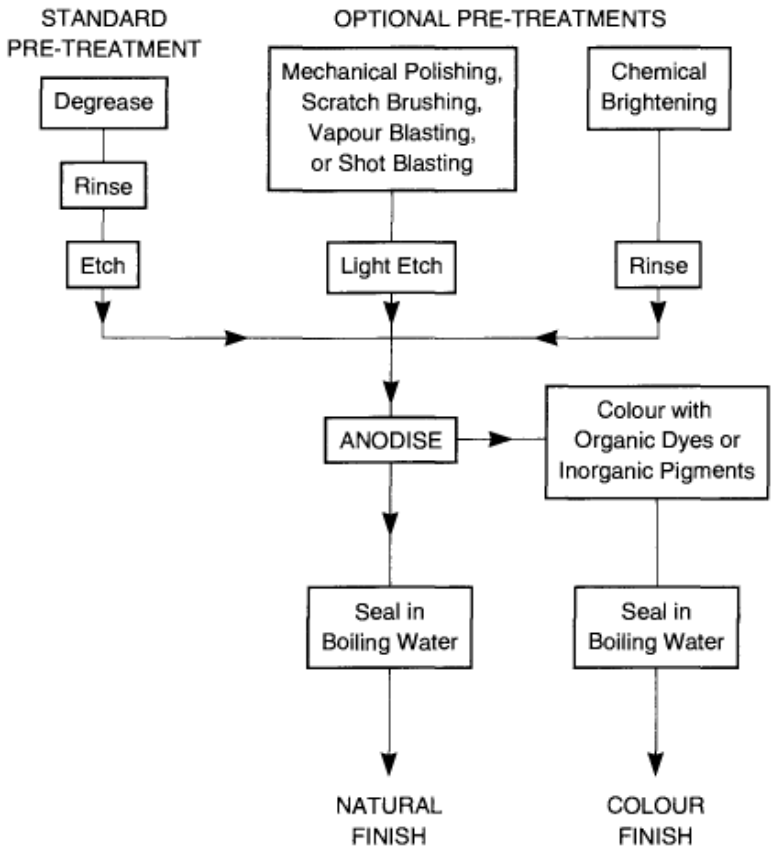

Figure 12: The anodising Process

Specification Factors for Architectural Anodising

Specifications governing the quality of anodised coatings are given in the following Australian Standard:

AS 1231 Aluminium and Aluminium Alloys — Anodised Coatings for Architectural Applications.

The average thickness of the anodised coating is usually described in terms of an AA value, the figures of which correspond directly to the film thickness in micron (1/1000th of millimetre). The film thicknesses used for some typical applications are shown below:

AA	Application
10 to 15	Internal fittings subjected to robust handing, such as handrails and internal partitions.
20 to 25	All external fittings such as window/door assemblies, etc.

The most appropriate extrusion alloys for decorative and architectural anodising are those in the 6000 Series. Other alloys may be anodised but the finish cannot be guaranteed to meet the requirements of AS 1231. A guide to anodising suitability is given in Table 7 below.

Table 7: the Suitability of Alloys for Anodising

Alloy	Suitability for Anodising in Terms of Finish Type			
	Natural Finish	Colour Finish	Brightened Finish	Protective Finish
6060, 6063	Very Good	Very Good	Good to Very Good	Very Good
6106	Very Good	Very Good	Good to Very Good	Very Good
6061,6082, 6005A	Fair	Fair	Fair	Good
6463	Very Good	Very Good	Excellent	Very Good

Footnote: [1] Including hard anodising.

In anodised components, the heat affected zones of welded or brazed joints will show a variation in colour from the remainder of the section. This may vary from a slightly darker tone to a very dark grey, or even black when a high silicon filler wire is used in brazing.

Since there may be slight variations in colour between production batches of anodising, top and bottom colour limits should be agreed upon between purchaser and supplier. Where cast and wrought components are anodised and used in combination, an exact colour match is rarely possible because of the marked difference in the chemical composition of the two materials.

It is essential to maintain a good electrical connection between the loading bars and aluminium components during anodising. This is usually achieved by jigging with non-metallic clamps. The clamp contact areas, however, do not anodise or colour and show as light-coloured areas even on material anodised with a natural finish. The clamps should therefore be placed so that they do not mar the appearance of the component — they should be placed on surfaces that do not show. When all surfaces of a component "show" and appearance is critical, it may be possible to provide clamping tags that can be cut off after anodising. With extruded sections, an extra 50 mm must be allowed at each end for clamping and the ends cut off after anodising.

APPLIED FINISHES

Applied finishes are imparted to aluminium to provide decorative and/or protective properties. They are generally understood to refer primarily to paint coatings (lacquers, enamels etc employing both natural and synthetic compounds), plastic films or laminates, vitreous enamel and mechanically applied coatings.

POWDER COATINGS

Powder coating has seen extraordinary growth in recent years and is now the preferred method of finishing for the majority of aluminium extrusions. The use of thermosetting powders has reduced air and water pollution issues as well as giving finishes which offer superior film properties such as adhesion, flexibility, scuff resistance, corrosion and chemical resistance compered to paints deposited from liquid systems. Powder coatings are applied in a single coat and do not require priming as do many wet paint systems

For successful powder coating it is important that a recognised pre-treatment system is used. The pre-treatment can either be a batch process involving successive tanks (used for horizontal application of powder which may require intermediate support marks) for degreasing, etching, and a

conversion coat or the pre-treatment can be an in-line spray process (used in vertical application of powder with 1 drill hole for hanging) which has the benefit of reducing handling.

Machining

Aluminium alloys are among the most machinable metals and can be cut at high speeds. Two basic properties influence the machining operation:

1. The high coefficient of thermal expansion of aluminium.
2. The friction generated between small tools and aluminium.

The problems associated with these characteristics can be easily overcome by using a combined coolant and lubricant.

Machines normally found in a workshop are suitable for machining aluminium. The best results are obtained with relatively high speeds and it is frequently found that woodworking machines can be employed if they have sufficient power and rigidity. High-speed steel tools may be used on all aluminium alloys. Plain carbon steel tools may also be used for short runs, but they do not have sufficient life for quantity production. Tungsten-carbide-tipped tools are recommended for long production runs, but even these tools require regular resharpening, particularly when used with anodised material. A chip breaker should be used with high-speed machining of alloy 6061, to avoid the formation of long spiral swarf.

Thermal expansion may cause distortion when extensive removal of metal is required. The amount of distortion that occurs is a function of the machining practices employed — cooling and lubrication should be generous.

ROUTING

Routing is one of the best methods of machining aluminium. The machining process resembles a milling operation, gives a good surface finish (as fine as 0.75 µm) and can be used with spindle speeds of up to 24,000 rpm. The high operating speed and low loading ensures smooth easy control, which is essential when profiling to follow the contour of a complex template.

Table 8: Routing — Facing and Profiling

Routing Operation	Cutting Speed m/min	Feed m/min
Facing	Up to 6,000	
Profiling	600 to 2,100	Up to 6 Reduced feed is necessary with an increase in work thickness

Helix Angle	Radial Rake	Primary Clearance
25°	5° – 7°	5° – 10°

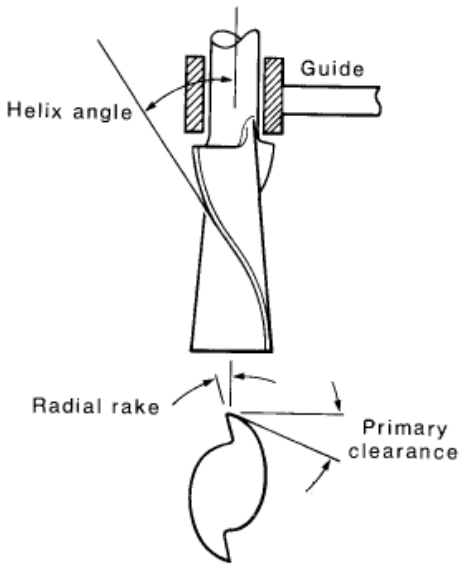

DRILLING

As with other aluminium machining operations, drilling can be carried out at very high speeds. Special machines for use with small diameter drills operate at 80,000 rpm. However, most drilling operations are carried out at more modest speeds. The cutting performance of a drill is influenced by its peripheral speed and this should be taken into account when deciding on the spindle speed for a given drill diameter.

To ensure rapid chip removal and to prevent chip build-up, drills should be inspected regularly to see that they have a bright finish and polished flutes. Drills may be reground, when necessary, care being taken to ensure that the chisel edge retains its correct length and the web at the drill point does not thicken. Web thickening increases the end pressure on the drill and may cause drill breakage.

When drilling deep holes (particularly deep holes of large diameter) excessive heat may be generated if it is not dissipated by an appropriate use of coolant, with the consequence that the hole will contract on subsequent cooling of the metal.

Table 9: Drills

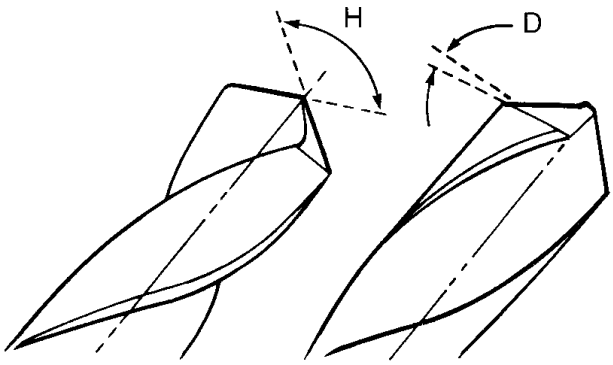

Helix Angle	Point Angle H	Clearance Angle D	Flutes	Web Thickness
20° – 25°	118°	12° – 20°	Polished	Thinner than used for other metals

SAWING

Modern saws used in the fabrication of aluminium sections give clean, virtually burr-free cuts if the correct tooth size and rotation speeds are used and the teeth are kept sharp. This is particularly so for tungsten- carbide-tipped blades. This type of blade is in general use for fabricating aluminium and gives excellent results on the hard surface of pre-anodised sections. Feed will vary with the saw type, section size, alloy and temper, but should never be less than 0.05 mm per tooth. When cutting thin sections, it is advisable to have two or more teeth engaging at the same time.

Table 10 sets out basic saw data. The lower speed range is recommended for high-speed steel blades and the higher speed range for tungsten-carbide-tipped blades. A cutting fluid should always be used.

Table 10: Basic Saw Data

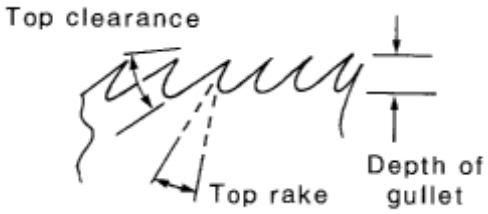

High-Speed Steel Blade
Circular, with hollow-ground teeth

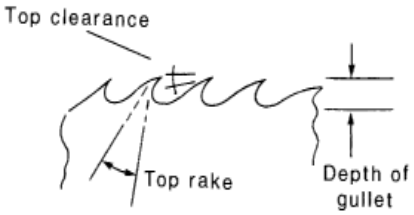

Tungsten-Carbide-Tipped Blade
Circular, with coarse chip-breaker teeth

Saw Type	Blade Diameter mm	Blade Thickness mm	Pitch of Teeth mm	Cutting Speed m/min
High-Speed Steel	250 – 460	2.3 – 3.7	8.5 – 13	1,500 – 2,400
Tungsten-Carbide-Tipped	560 – 1,220	6.4 – 12.7	25 – 50	1,200 – 4,500

Saw Type	Gullet Depth mm	Side Clearance mm	Top Clearance Handfeed	Top Clearance Powerfeed	Top Rake Handfeed	Top Rake Powerfeed
High-Speed Steel	6.4 – 12.7	1° – 2°	20° – 30°	25° – 35°	12° – 18°	15° – 24°
Tungsten-Carbide-Tipped	12.7 – 57.0	1° – 2°	7° – 9°	5° – 7°	5° – 12°	10° – 20°

Joining

Aluminium alloys can be joined in a variety of ways. The usual methods, all of which are well established, include welding, screwing, crimping, riveting, bolting and adhesive bonding.
In addition, the extrusion process enables mating sections to be manufactured so that they provide various forms of slide-on, snap-together or interlocking joints of both permanent and releasable types.

WELDING
Welding is a widely accepted method of joining aluminium and the techniques for welding aluminium are well known in the engineering and manufacturing industries. The basic welding processes are Gas Tungsten Arc Welding (GTAW) also known as Tungsten Inert Gas (TIG) and Gas Metal Arc Welding (GMAW) also known as Metal Inert Gas (MIG). As the titles suggest, both processes are inert-gas-shielded systems which shroud the weld area from the air to prevent the reformation of oxide film.

Surface Preparation
Cleanliness and removal of the oxide film are most important. The proposed weld area must be degreased using methylated spirits, acetone, etc. and the joint wiped dry. It is necessary to provide adequate ventilation for any solvents used, particularly industrial cleaning solvents such as carbon tetrachloride, trichloroethylene, etc. After degreasing, the joint is cleaned with stainless steel wire

brushes, or a chemical etch cleaner, to remove the oxide film. Welding should then be carried out as soon as possible.

Carborundum wheels are not recommended for cleaning, since they produce grit particles which become embedded in the aluminium surface and contaminate the weld. Filler wire is cleaned by wiping with wire wool. Pre-packed spool wire is supplied in a clean condition.

Gas Tungsten Arc Welding (GTAW) Process
In the gas tungsten arc welding process, the arc is struck between the workpiece and a non-consumable tungsten electrode. Filler wire is fed independently. Although a mechanized GTAW system is available, the process is more widely used as a manual system where close control of the welding conditions can be readily maintained.

The resulting welds are usually of good appearance and penetration, particularly in situations where a backing plate cannot be used.

Gas Metal Arc Welding (GMAW) Process
In the gas metal arc welding process, the arc is struck between the workpiece and a consumable wire electrode which is constantly fed from a spool. The arc is self-adjusting and takes into account small movements of the torch. Penetration and appearance are not as easy to control as in the GTAW system, although the addition of pulsed arc equipment can improve penetration and reduce the need for backing plates.

Filler Wire
The 6000 alloy series can be welded readily to a wide range of other aluminium alloys. Table 11 below shows the preferred weld filler wire for such combinations of parent metals and, where appropriate, gives an alternative filler wire which can be used when the finished component is to be anodised and a close colour match is required between the weld area and the parent metal. Alloys in the 2000 Series are not shown in the table since they are not recommended for fusion welding using the TIG and MIG processes.

Table 11: Recommended Alloys for Weld Filler Wire

	Filler wire alloy for welding the 6000 series alloys ~~6060 or 6005A~~ to an alloy from the			
	1000 Series	3000 Series	5000 Series	6000 Series
Preferred Weld Filler Wire	4043	4043	5356	4043
Alternative Weld Filler Wire	5356	5356	-	5356

Welded Joint Design
The design of a satisfactory welded joint must consider both the practicalities of the welding process and the structural requirements of the joint itself. The edge preparation for welding will depend on the type of weld proposed (butt, bevel or fillet), the thickness of material to be joined and the welding process to be employed.

SCREWING

The ease with which aluminium alloys can be drilled or punched and the incorporation of screw slots or channels in extrusions has encouraged the use of stainless-steel self-tapping screws as a standard method of joining, particularly in the window and door industries. The stainless-steel threads bite into the aluminium to give a very positive connection. A typical patio door will use two self-tapping screws per kilogram of aluminium section used.

Screw slots are rarely fully closed since the use of 300^0 slots gives a very marked improvement in extrudability with very little loss in pull-out strength. The dimensional accuracy of the slot diameter is important and the standard diameter appropriate to each screw size should be used. See pages 39 and 40 for standard screw slot dimensions.

The use of longitudinal screw grooves (Figure 13 below) is not as widespread, but the correct combination of groove width and screw size can ensure high pull-out values. Some care is necessary if self-tapping screws of triangular cross-section are used since full engagement of threads may not be possible on both sides of the groove.

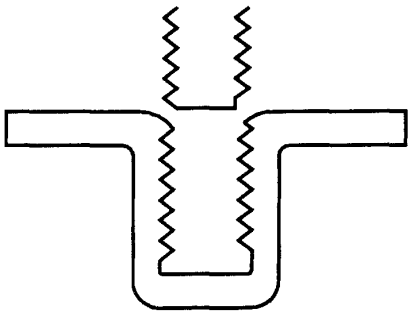

Figure 13: A Longitudinal Screw Groove

CRIMPING

In this method of corner connection, the extrusion has a built-in hollow recess. After the sections have been mitred, a corner angle is fitted in the recess and the joint is assembled and held in a rigid jig. Two pressure prongs then pierce and upset the section web into the corner angle, producing a very stable frame assembly.

See Figure 14 below. Most crimped corners rely on this mechanical connection only, but if required, a slow setting adhesive may be used to seal the corner and provide some extra strength.
Crimping is applicable to any form of construction where mitred corners are used and is common in the door and window industries.

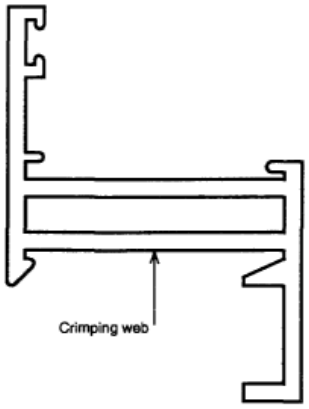

Figure 14: Crimping

Standards For Extruded Products

Definitions

Rod	A solid round section 10 mm or greater in diameter, the length of which is great in relation to the diameter.
Bar	A solid section long in relation to its cross-section, which is symmetrical and square, rectangular, hexagonal or octagonal (excluding flattened wire), with sharp or rounded corners or edges and of which the width or greatest distance between parallel faces is 10 mm or greater.
Solid Shape	An extruded section with a geometry that does not form a void and a length which is great in relation to the cross-sectional dimensions.
Class A Hollow Extruded Shape	A single void hollow extruded shape, having no internal protrusions, with the void fully enclosed and greater than 15 mm in diameter or 177 mm2 in area. The void must be round, square or rectangular provided that the width to depth ratio is less than 5:1. Wall thickness must be uniform except that a non-uniform wall is allowed at radiused corners only, for internal and/or external radii up to 7.5 mm.
Class B Hollow Extruded Shape	A single void hollow extruded shape with the void fully enclosed and other than class A, or a solid extruded shape incorporating a single semi-hollow area classified as a hollow according to Table 3.
Class C Hollow Extruded Shape	A multiple void hollow extruded shape with two or more fully enclosed voids (multi hollows incorporating any semi-hollow area classified as a hollow according to Table 3 will be classified as Class D hollows).
Class D Hollow Extruded Shape	Any hollow extruded shape which incorporates a semi-hollow area or any solid extruded shape incorporating multiple semi-hollow areas classified as hollows according to Table 3.
Yacht Mast	A hollow or solid extruded shape used in the manufacture of masts or booms for yachts, basically round or elliptical and incorporating a sail track or provision for a sail track.

Table 12: Semi-Hollow Area Classification for Extruded Shapes

Applied to symmetrical semi-hollow areas only (e.g., A1).

Asymmetrical semi-hollow areas (e.g., A2) are determined by negotiation with the supplier.

Gap Dimension G (mm)		Ratio A/G^2, above which a Semi-Hollow Area is classified as a Hollow[1]
Over	Up to	
-	1.5	2.0
1.5	3.0	2.5
3.0	6.0	3.0
6.0	-	4.0

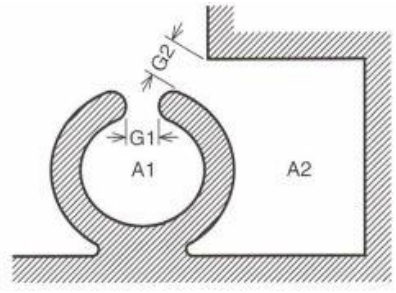

Footnote [1] A = semi-hollow area (mm^2)

Wrought Alloys – Chemical Compositions

Chemical Composition Limits of Registered Alloys [1] [2] – covers alloys used for extrusions and rolled products.

International Registered Designation	Silicon	Iron	Copper	Manganese	Magnesium	Chromium	Zinc			Titanium	Others [3]		Aluminium
											Each	Total	
1199	0.006	0.006	0.006	0.002	0.006		0.006	0.005 Ga	0.005 V	0.002	0.002		99.99[5]
1050	0.25	0.40	0.05	0.05	0.05		0.05		0.05 V	0.03	0.03		99.50[4]
1070	0.20	0.25	0.04	0.03	0.03		0.04	0.03 Ga	0.05 V	0.03	0.03		99.70[4]
1350	0.10	0.40	0.05	0.01		0.01	0.05		0.05 B	0.02 V + Ti	0.03	0.10	99.50[4]
1145	0.55 Si + Fe		0.05	0.05	0.05		0.05		0.05 V	0.03	0.03		99.45[4]
1150	0.45 Si + Fe		0.05-0.20	0.05	0.05		0.05			0.03	0.03		99.50[4]
1100	0.95 Si + Fe		0.05-0.20	0.05			0.10		[6]		0.05	0.15	99.00[4]
1120	0.10	0.40	0.05-0.35	0.04	0.20	0.01	0.05	0.03 Ga	0.05 B	0.02 V + Ti	0.03	0.10	99.20[4]
1200	1.00 So + Fe		0.05	0.05			0.10		[6]	0.05	0.05	0.15	99.00[4]
1230	0.70 Si + Fe		0.10	0.05	0.05		0.10		0.05 V	0.03	0.03		99.30[4]
2011	0.40	0.7	5.0-6.0				0.30		[7]		0.05	0.15	Rem
2014	0.50-1.2	0.7	3.9-5.0	0.40-1.2	0.20-0.8	0.10	0.25			0.15	0.05	0.15	Rem
2014A	0.50-0.9	0.50	3.9-5.0	0.40-1.2	0.20-0.8	0.10	0.25		0.10 Ni	0.20 Zn + Ti	0.05	0.15	Rem
2024	0.50	0.50	3.8-4.9	0.30-0.9	1.2-1.8	0.10	0.25			0.15	0.05	0.15	Rem
3003	0.60	0.7	0.05-0.20	1.0-1.5			0.10				0.05	0.15	Rem
3203	0.60	0.7	0.05	1.0-1.5			0.10		[6]		0.05	0.15	Rem
3004	0.30	0.7	0.25	1.0-1.5	0.8-1.3		0.25				0.05	0.15	Rem
3004A	0.40	0.7	0.25	0.8-1.5	0.8-1.5	0.10	0.25		0.03 Pb	0.05	0.05	0.15	Rem
3005	0.60	0.7	0.30	1.0-1.5	0.20-0.6	0.10	0.25			0.10	0.05	0.15	Rem
3105	0.60	0.7	0.30	0.30-0.08	0.20-0.8	0.20	0.40			0.10	0.05	0.15	Rem
4043	4.5-6.0	0.8	0.30	0.05	0.05		0.10		[6]	0.20	0.05	0.15	Rem

International Registered Designation	Silicon	Iron	Copper	Manganese	Magnesium	Chromium	Zinc		Titanium	Others [3]		Aluminium
										Each	Total	
4047	11.0-13.0	0.8	0.30	0.15	0.10		0.20	[6]		0.05	0.15	Rem
5005	0.30	0.7	0.20	0.20	0.50-1.1	0.10	0.25			0.05	0.15	Rem
5052	0.25	0.40	0.10	0.10	2.2-2.8	0.15-0.35	0.10			0.05	0.15	Rem
5251	0.40	0.50	0.15	0.10-0.50	1.7-2.4	0.15	0.15		0.15	0.05	0.15	Rem
5252	0.08	0.10	0.10	0.10	2.2-2.8		0.05	0.05 V		0.03	0.10	Rem
5454	0.25	0.40	0.10	0.50-1.0	2.4-3.0	0.05-0.20	0.25		0.20	0.05	0.15	Rem
5056	0.30	0.40	0.10	0.05-0.20	4.5-5.6	0.05-0.20	0.10			0.05	0.15	Rem
5356	0.25	0.40	0.10	0.05-0.20	4.5-5.5	0.05-0.20	0.10	[6]	0.06-0.20	0.05	0.15	Rem
5383	0.25	0.25	0.20	0.7-1.0	4.0-5.2	0.25	0.40	[10]	0.15	0.05	0.15	Rem
5457	0.08	0.10	0.20	0.15-0.45	0.8-1.2		0.05	0.05 V		0.03	0.10	Rem
5557	0.10	0.12	0.15	0.10-0.40	0.40-0.8			0.05 V		0.03	0.10	Rem
5082	0.20	0.35	0.15	0.15	4.0-5.0	0.15	0.25		0.10	0.05	0.15	Rem
5083	0.40	0.40	0.10	0.40-1.0	4.0-4.9	0.05-0.25	0.25		0.15	0.05	0.15	Rem
5086	0.40	0.50	0.10	0.20-0.7	3.5-4.5	0.05-0.25	0.25		0.15	0.05	0.15	Rem
5182	0.20	0.35	0.15	0.20-0.50	4.0-5.0	0.10	0.25		0.10	0.05	0.15	Rem
6060	0.30-0.6	0.10-0.30	0.10	0.10	0.35-0.6	0.05	0.15		0.10	0.05	0.15	Rem
6103	0.35-1.1	0.60	0.2-0.3	0.8	0.8-1.5	0.35	0.20		0.10	0.05	0.15	Rem
6261	0.4-0.7	0.40	0.15-0.40	0.20-0.35	0.7-1.0	0.10	0.20		0.10	0.05	0.15	Rem
6106	0.30-0.6	0.35	0.25	0.05-0.20	0.40-0.8	0.20	0.10			0.05	0.10	Rem
6005A	0.50-0.9	0.35	0.3	0.50	0.40-0.7	0.30	0.20		0.10	0.05	0.15	Rem
6082	0.70-1.3	0.50	0.10	0.40-1.0	0.6-1.2	0.25	0.20		0.10	0.05	0.15	Rem
6061A	0.40-0.8	0.70	0.15-0.70	0.15	0.8-1.2	0.04-0.35	0.25	0.003 Pb	0.15	0.05	0.15	Rem
6003	0.35-1.0	0.60	0.10	0.8	0.8-1.5	0.35	0.20		0.10	0.05	0.15	Rem
6101	0.30-0.7	0.50	0.10	0.03	0.35--0.8	0.03	0.10	0.06 B		0.03	0.10	Rem
6201A	0.50-0.7	0.50	0.04		0.6-0.9			0.06 B		0.03	0.10	Rem
6351	0.7-1.3	0.50	0.10	0.40-0.8	0.40-0.8		0.20		0.20	0.05	0.15	Rem

International Registered Designation	Silicon	Iron	Copper	Manganese	Magnesium	Chromium	Zinc		Titanium	Others [3]		Aluminium
										Each	Total	
6253	[8]	0.50	0.10		1.0-1.5	0.04-0.35	1.6-2.4			0.05	0.15	Rem
6061	0.40-0.8	0.70	0.15-0.40	0.15	0.8-1.2	0.04-0.35	0.25		0.15	0.05	0.15	Rem
6262	0.40-0.8	0.70	0.15-0.40	0.15	0.8-1.2	0.04-0.14	0.25	[9]	0.15	0.05	0.15	Rem
6063	0.20-0.6	0.35	0.10	0.10	0.45-0.9	0.10	0.10		0.10	0.05	0.15	Rem
6463A	0.20-0.6	0.15	.025	0.05	0.30-0.9		0.05			0.05	0.15	Rem
7005	0.35	0.40	0.10	0.20-0.7	1.0-1.8	0.06-0.20	4.0-5.0	0.08-0.20 Zr	0.01-0.06	0.05	0.15	Rem
7072	0.7 Si + Fe		0.10	0.10	0.10		0.8-1.3			0.05	0.15	Rem
7075	0.40	0.50	1.2-2.0	0.30	2.1-2.9	0.18-0.28	5.1-6.1		0.20	0.05	0.15	Rem
8006	0.40	1.2-2.0	0.30	0.30-1.0	0.10		0.10			0.05	0.15	Rem
8008	0.60	0.9-1.6	0.20	0.50-1.0			0.10		0.10	0.05	0.15	Rem
8011	0.50-0.9	0.6-1.0	0.10	0.10	0.05	0.05	0.10		0.08	0.05	0.15	Rem

Footnotes:

1. Composition in % maximum unless shown as a range or a minimum.
2. For purposes of determining conformance to these limits, an observed value or a calculated value obtained from analysis is rounded off to the nearest unit in the last right-hand place of figures used in expressing the specified limit, in accordance with the following:

   When the figure next beyond the last figure or place to be retained is less than 5, the figure in the place retained should be kept unchanged.
   When the figure next beyond the last figure or place to be retained is greater than 5, the figure in the last place retained should be increased by 1.
   When the figure next beyond the last figure or place to be retained is 5 and
   (i) there are no figures, or only zeros, beyond this 5, if the figure in the last place to be retained is odd, it should be increased by 1; if even, it should be kept unchanged.
   (ii) if the 5 is followed by any figures other than zeros, the figure in the last place retained should be increased by 1, whether odd or even.
3. Analysis is regularly made only for the elements for which specific limits are shown, except for unalloyed aluminium. If, however, the presence of other elements is suspected to be, or in the course of routine analysis is indicated to be in excess of the specified limits, further analysis is made to determine that these other elements are not in excess of the amount specified.
4. The aluminium content for unalloyed aluminium not made by a refining process is the difference between 100.00% and the sum of all other metallic elements present in amounts of 0.010% or more each, expressed to the second decimal.
5. The aluminium content for unalloyed aluminium made by a refining process is the difference between 100.00% and the sum of all other metallic elements present in amounts of 0.0010% or more each, expressed to the third decimal.

6. 0.0008% max Be for welding electrodes and filler wire only.
7. 0.20-0.6% Bi, 0.20-0.6% Pb.
8. 45-65% of the Magnesium content.
9. 0.40-0.7% Bi, 0.40-0.7% Pb.
10. 0.20% max Zr

Mechanical Properties

Table 13 Mechanical Property Limits – Extruded Products

Alloy and Temper	Thickness [1] (mm)		Tensile Strength (MPa)				Elongation[23] (% min in 50mm or 5.65 √A)
			Ultimate		Yield		
	Over	Up to	Min	Max	Min	Max	
2011 – T4	All Thicknesses						
2011 – T6	-	25	350		220		8
	25	75	345		220		8
	75	-	340		200		8
6005 – T1		12	170		105		16
6005 – T5	-	3	260		240		8
	3	25	260		240		10
6005A – T4	-	12	180		110		14
6005A – T5	All Thicknesses		260		215		8
6005A – T6* Does not currently align with AS 1866	All Thicknesses		260		240		8
6060 – O[5]	All Thicknesses			130			16
6060 – T1	-	12	115		60		12
	12	25	110		55		10
6060 – T5	-	12	150		110		8
	12	25	145		105		6
6060 – T52[2]	-	12	150	205	110		8
6060 – T6	-	25	205		170		8
6063 – T6	-	25	205		170		8
6061 – 0[5]	All Thicknesses			150		110	14
6061 – T1	-	12.5	180		95		16
6061 – T4	All Thicknesses		180		110		14
6061 – T5	-	3	250		220		8
	3	25	235		210		8
6061 – T6 & T62[6]	All Thicknesses		260		240		8
6063 – H112	All Thicknesses		110				13
6063 – O[5]	All Thicknesses			130			16
6063 – T1	-	12	115		60		12
	12	25	110		55		10
6063 – T4 & T42[6]	-	150	130		70		12
6063 – T5	-	12	150		110		8
	12	25	145		105		6
6063 – T52[7]	-	12	150	205	110		8
6063 – T6 & T62[6]	-	25	205		170		8
	25	150	185		160		10

Alloy and Temper	Thickness [1] (mm)		Tensile Strength (MPa)				Elongation[23] (% min in 50mm or 5.65 √A)
			Ultimate		Yield		
	Over	Up to	Min	Max	Min	Max	
6082 – T4	-	150	190		120		14
	150	200	170		110		11
6082 – T5	-	6	270		230		8
6082 – T6	-	20	295		255		7
	20	150	310		270		7
	150	200	280		240		5
6106 – T4 & T42[6]	-	150	130		70	12	
6106 – T6 & T62[6]	-	10	235		210		8
	10	25	205		170		8
	25	150	185		160		10
6262 – T6	All Thicknesses		260		240		8
6351 – T4	-	150	185		115		16
6351 – T5	-	6	260		240		8
6351 – T5[4]	-	12.5	205		140		10
6351 – T6	-	150	295		255		8
6463 – T6	-	3	205		170		8
	3	12	205		170		10
6463A – T1	-	12	115		60		12
6463A – T5	-	12	150		110		8
7005 – T53	-	20	350		300		10

Footnotes

[1]The thickness of the cross-section or wall thickness from which the tensile specimen is taken determines the applicable mechanical properties. `

[2] For material of such dimensions that a standard test specimen cannot be taken, or for material thinner than 1.6 mm, the test for elongation is not required.

[3] A = cross-sectional area of specimen.

[4] These yield strengths are not determined or guaranteed unless specifically requested.

[5] Annealed (0 temper) material shall, upon heat-treatment and ageing, be capable of developing the mechanical properties applicable to T42 or T62 temper material respectively.

[6] Material heat-treated from any temper by the user should attain the mechanical properties applicable to this temper.

[7] A temper satisfying T5 requirements with improved formability.

Standard Tolerances

General Notes

1. The tolerances applicable to extruded products are much wider than those for machined products.
2. These standard tolerances apply to the average shape; wider tolerances may be required for more complex shapes and closer tolerances may be possible for others, as indicated by a supplier's section drawing.
3. The tolerances for a dimension composed of two or more component dimensions is the sum of the tolerances of the component dimensions if all of the component dimensions are indicated.
4. When a dimension tolerance is specified other than as an equal bilateral tolerance, the value of the standard tolerance is that which would apply to the mean of the maximum and minimum dimensions permitted under the tolerance.
5. The Circumscribing Circle Diameter is the diameter of the smallest circle which will completely enclose the cross-section of the extruded product.
6. The tolerances given in Tables 14 to 27 inclusive DO NOT APPLY TO extruded products in 0 TEMPER. The specification of tolerances for 0 temper material is by negotiation only.
7. When outside dimension, inside dimension and wall thickness are all specified, standard tolerances apply to any two of these dimensions but not to all three. When both outside and inside dimensions are specified, tolerances applicable to the outside dimension shall apply to both the outside and inside dimensions.

Table 14: Diameter, Width and Depth Tolerances 1 – Class A Hollow Shapes
All Alloys Except 2000 and 5000 Series2

Specified Dimension (mm)		TOLERANCE (± mm)	
		Round Tube	**Square and Rectangular Hollows**
		Allowable Deviation of Diameter from Specified Diameter	Allowable Deviation of Width or Depth from Specified Width or Depth[3]
Over	Up to	Column 1	Column 2
-	25	0.5	0.5
25	50	0.7	0.7
50	100	0.8	0.9
100	125	1.3	1.2
125	150	1.3	1.4
150	180	1.9	1.7
180	200	1.9	1.9
200	220	2.6	2.2
220	250	2.6	2.4
250	280	3.2	2.7
280	330	3.8	2.9

Footnotes

[1] See 'General Notes' above before using this table
[2] For 200 and 5000 Series Alloys, multiply the tolerances give in Table 14 by 1.5.
[3] Rectangular Hollow

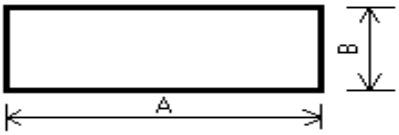

The tolerance for the width (A) is the value in Column 2 for a dimension equal to depth (B).
The tolerance for depth (B) is the value in column 2 for a dimension equal to the width (A).
Example:

The width tolerance of a 75 mm wide x 23 mm deep rectangular tube is ± 0.5 mm and the depth tolerance is ± 0.9 mm.

The faces to which the above width and depth tolerances apply, are also subject to the flatness tolerances of Table 18. In such a case the dimension must comply with whichever is the more demanding condition.

Table 15: Wall Thickness Tolerances1 – Class A Hollow Shapes
All Alloys

Specified Wall Thickness[2] (mm)		**TOLERANCE (± mm) Round Tube, Square and Rectangular Hollows** Allowable Deviation from Specified Dimension	
Over	Up to	Circumscribing Circle Diameter Up to 125 mm	Circumscribing Circle Diameter Over 125 mm
1	**1.5**	0.2	0.25
1.5	**2.5**	0.25	0.25
2.5	**3**	0.3	0.3
3	**4**	0.35	0.35
4	**5**	0.4	0.45
5	**6**	0.5	0.55
6	**7**	0.6	0.65
7	**8**	0.65	0.75
8	**9**	0.7	0.85
9	**10**	0.7	0.95
10	**11**	0.75	1.05
11	**12**	0.8	1.15
12	**13**	0.85	1.25
13	**14**	0.9	1.35
14	**15**	0.95	1.45
15	**20**	1	1.55
20	**25**	1.25	1.65
25	**40**	1.5	1.75

Footnotes

[1] See 'General Notes' on Page 66 before using this table.

[2] When the dimensions specified are outside and inside, rather than wall thickness itself, the allowable deviation of the wall thickness applies to the mean wall thickness. The mean wall thickness is the average of the maximum and minimum measured wall thicknesses, when measured at the ends of the cut length

Table 16: Cross-Section Tolerances – Metal Dimensions [1 3 4]
Rod, Bar, Solid Shapes, Class B, C and D Hollow Shapes
All Alloys Except 2000 and 5000 Series[2] and Machining Stock

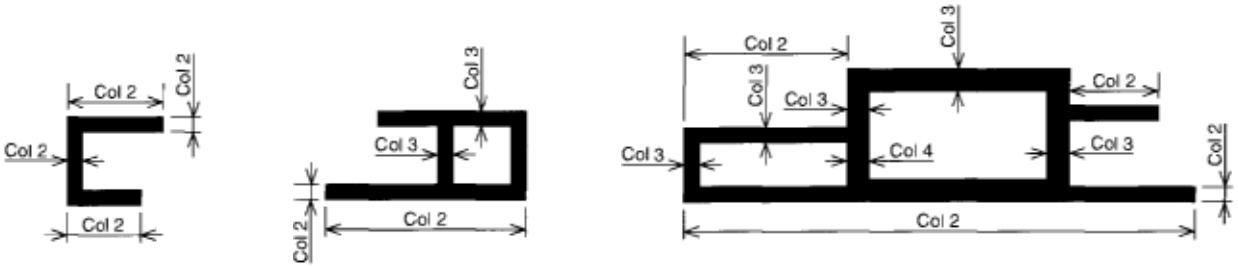

		Tolerance (± mm) Allowable Deviation from Specified Dimension					
Specified Dimension (mm)		All metal Dimensions except those covered by Column 3 and Column 4		All wall thicknesses Completely Enclosing Space 70 mm^2 and over, except those covered by Column 4		Wall thicknesses between Adjacent Voids Enclosing Space 70 mm^2 and over	
Column 1		Column 2		Column 3		Column 4	
		Circumscribing Circle Diameter		Circumscribing Circle Diameter		Circumscribing Circle Diameter	
Over	Up to	Up to 250 mm	Over 250 mm	Up to 250 mm	Over 250 mm	Up to 250 mm	Over 250 mm
1	**1.5**	0.15	0.35	0.15	-	0.3	-
1.5	**3**	0.15	0.35	0.25	0.4	0.3	0.5
3	**4**	0.2	0.4	0.4	0.5	0.5	0.7
4	**5**	0.2	0.4	0.5	0.7	0.6	0.8
5	**6**	0.2	0.4	0.6	0.8	0.7	1
6	**7**	0.2	0.4	0.7	1.0	0.8	1.2
7	**8**	0.2	0.4	0.8	1.2	1.0	1.4
8	**9**	0.2	0.4	0.9	1.3	1.1	1.6
9	**10**	0.2	0.4	1.0	1.5	1.2	1.7
10	**11**	0.2	0.4	1.1	1.6	1.3	1.9
11	**12**	0.2	0.4	1.2	1.7	1.5	2.1
12	**13**	0.25	0.45	1.3	1.8	1.6	2.3
13	**14**	0.25	0.45	1.4	2.0	1.7	2.5
14	**15**	0.25	0.45	1.5	2.2	1.8	2.6
15	**16**	0.25	0.45	1.6	2.3	2.0	2.8
16	**20**	0.25	0.45	1.6	2.3	2.0	2.8
20	**25**	0.25	0.45	1.6	2.3	2.0	2.8
25	**40**	0.3	0.5	1.6	2.3	2.0	2.8
40	**50**	0.4	0.6	**BY NEGOTIATION ONLY**			
50	**100**	0.6	0.9				
100	**150**	0.9	1.1				
150	**200**	1.1	1.4				
200	**250**	1.4	1.7				
250	**300**		1.9				
300	**350**		2.2				
350	**400**		2.4				

Footnotes

[1] See 'General Notes' on Page 66 before using this table.

[2] For 2000 and 5000 series Alloys, multiply the tolerances given in Table 16 by 1.5.

[3] For Cross-section Tolerances – Space Dimensions, see Table 17.

[4] Tolerance applicable to the wall thickness enclosing or partially enclosing the void of hollow or semi-hollow shapes shall, when the specified thickness of one wall is equal to or greater than 3 times that of the opposite wall, be as agreed between purchaser and supplier.

Table 17: Cross-Section Tolerances – Space Dimensions [1 3 4 6 7]
Solid Shapes, Class B, C and D Hollow Shapes
All Alloys Except 2000 and 5000 Series2

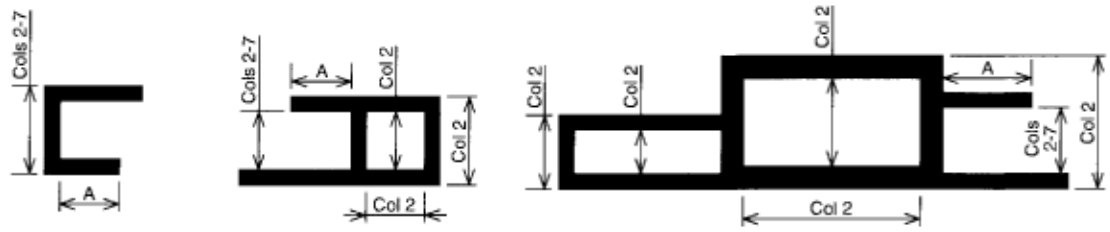

Specified Dimension (mm)		Tolerance (+ mm) Allowable Deviation from Specified Dimension Dimension (A) measured from base of leg5 (mm)					
Column 1		Column 2	Column 3	Column 4	Column 5	Column 6	Column 7
Over	Up to	5 Up to 15	Over 15 Up to 30	Over 30 Up to 60	Over 60 Up to 100	Over 100 Up to 150	Over 150 Up to 200
Circumscribing Circle Diameter: Up to 250 mm							
-	3	0.25	0.3				
3	6	0.3	0.35	0.4			
6	12	0.35	0.4	0.5	0.5		
12	20	0.4	0.45	0.5	0.55		
20	25	0.45	0.5	0.55	0.7	0.8	
25	40	0.55	0.6	0.7	0.8	0.9	
40	50	0.6	0.7	0.8	0.9	1.1	1.3
50	100	0.9	1.0	1.2	1.5	1.8	2.0
100	150	1.1	1.3	1.7	2.0	2.4	2.8
150	200	1.4	1.6	2.1	2.5	3.0	3.5
200	250	1.7	1.9	2.6	3.0	3.7	4.3
Circumscribing Circle Diameter: Over 250 mm							
-	3	0.5	0.5				
3	6	0.5	0.6	0.7			
6	12	0.5	0.6	0.8	1.3		
12	20	0.55	0.7	1.0	1.5		
20	25	0.6	0.8	1.3	1.8	2.6	
25	40	0.6	0.9	1.5	2.0	2.6	
40	50	0.9	1.1	1.8	2.3	2.8	4.3
50	100	1.1	1.4	2.0	2.6	3.0	4.5
100	150	1.4	1.7	2.3	2.8	3.3	5.0
150	200	1.7	1.9	2.6	3.0	3.5	5.0
200	250	1.9	2.2	2.8	3.3	3.8	5.5
250	300	2.2	2.4	3.0	3.5	4.0	5.5
300	350	2.4	2.7	3.3	3.8	4.3	6.0
350	400	2.7	2.9	3.5	4.0	4.5	6.0

Footnotes:

[1] See 'General Notes' on Page 66 before using this table.

[2] For 2000 and 5000 Series alloys, multiply the tolerances given in Table 17 by 1.5.

[3] See examples on Page 71 before using this Table.

[4] For Cross-Section Tolerances – Metal Dimensions, see Table 16.

[5] When dimension (A) is less than 5 mm, Metal Dimension Tolerances apply – use Column 2 of Table 16.

[6] Width and depth dimensions across a void refer to overall dimensions. Tolerance effects are greatest across the void centres, as shown by dotted lines. In a multi-void hollow, the tolerances apply only to individual voids. The tolerances apply for outside dimensions (shown) or inside dimensions when the space is completely enclosed.



The tolerance for the width (A) is the value in Column 2 of Table 17 for a dimension equal to the depth (B). The tolerance for the depth (B) is the value in Column 2 of Table 17 for a dimension equal to the width (A).

Example: The width tolerance of a 75 mm wide x 23 mm deep rectangular section is $\pm$ 0.45 mm and the depth tolerance is $\pm$ 0.9 mm.

The faces of the shape to which the above width and depth tolerances apply, are also subject to the flatness tolerance of Table 18. In such a case the section must comply with whichever is the more demanding condition.

[7] To determine the tolerance for a dimension composed of a combination of metal, open spaces and closed spaces, such as dimension (X), proceed as follows:

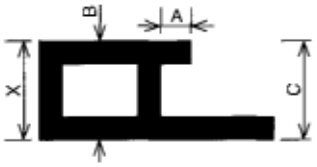

Determine the tolerance for dimension (B) from Column 2 of Table 17, applying Footnote 6 above.
Determine the tolerance for dimension I from Columns 2 to 7 of Table 17, depending on the dimension (A).
See examples below.
Apply the greater of these tolerances to the dimension (X).
The faces of the shape to which the above dimension (X) applies, are also subject to the flatness tolerances of Table 18. In such a case the section must comply with whichever is the more demanding condition.

Examples Illustrating the Use of Table 17

Open Space Dimensions

THIS DOES NOT APPLY IF the dimension (A) is less than 5 mm — use Column 2 of Table 16.

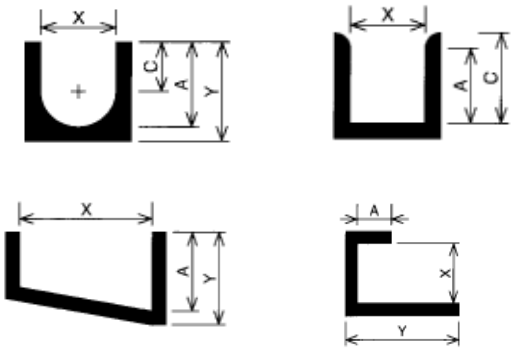

Figure 15

Tolerances for dimensions (X) in Figure 15 are determined from Table 17 as follows:

1. Locate dimension (X) in Column 1. 1.
2. Determine which of Columns 2 to 7 applies, depending on the dimension(A).
3. Locate the tolerance in Column 2, 3, 4, 5, 6 or7 in the same line as dimension (X).

Dimensions (Y) are metal dimensions. Their tolerances are determined from Column 2 of Table 16. Dimension(C) are shown merely to indicate incorrect dimensions for determining which of Columns 2 to 7 applies

Figure 16

Locate dimension (B) in Column 1.

2. Determine which of Columns 2 to 7 applies, depending on the dimension (A).
3. Locate the tolerance in Column 2, 3, 4, 5, 6 or 7 in the same line as dimension (B).

Closed Space Dimensions

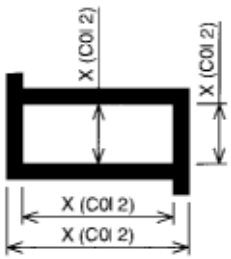

Figure 17

Dimensions (X) in Figure 17 are classified as "space dimensions through an enclose” void". Their tolerances are determined from Column 2 of Table 17, after applying Footnotes 6 and 7 on page 70.



Figure 18

Tolerances for dimensions (X) in Figure 18 are not determined from Table 17. In each case the dimensions are governed by the angularity tolerance for angle a — see Table 20.

Table 18: Flatness (Flat Surface) Tolerances [1 2 3] — All Extruded Products

Definition: A Flat Surface is that portion of the outline of a transverse cross-section of an extruded shape that is represented by a continuous straight line.

Surface Width W (mm)		**TOLERANCE** (mm) Allowable Deviation D	
Over	Up to	**Solid Shapes**	**Hollow Shapes**
0	25	0.1	0.15
25	-	0.004 W	0.006 W
In any 25 mm width		0.1	0.15

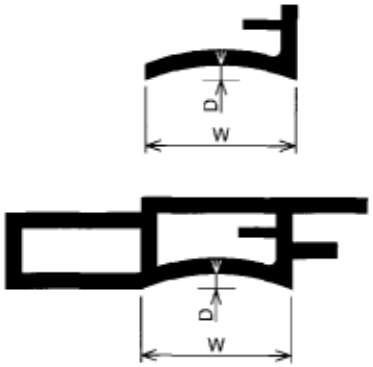

Footnotes

[1] See 'General Notes' on page 66 before using this table.

[2] In a multi-void hollow shape, the flatness tolerance applies to the boundary walls of each void.

[3] The Deviation (D) is normally measured by mounting the section with any concavity uppermost, setting a straight edge across the face of the section and measuring the gap with a feeler gauge or equivalent. The Deviation (D) must be measured at the point of maximum deviation.

Table 19: Total Transverse Flatness Tolerances[1 2] – Class C Hollow Shapes

Total Width W (mm)		**TOLERANCE** (mm)
Over	Up to	Allowable Deviation D
-	**100**	0.004 W
100	**250**	0.005 W
250	**-**	0.006 W

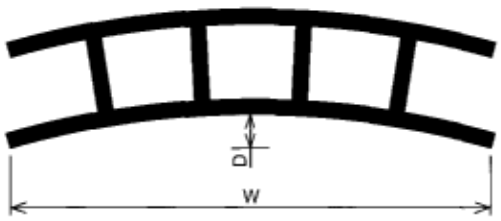

Footnotes:

[1] See 'General Notes' on page 66 before using this table.

[2] The Total Transverse Flatness Tolerance applies only to multiple hollow shapes comprising a single row of voids bounded on the long sides by two continuous parallel faces, as illustrated in the table. Other shapes to which the total flatness tolerance might apply, are subject to negotiation. The Deviation (D) is only measured for (W) equal to the full section width on the concave side. The boundary wall flatness of individual voids is determined in accordance with Table 18.

Table 20: Angularity Tolerance [1] [2] — All Extruded Products

TOLERANCE
Allowable Deviation from Specified Angle
± 2 degrees

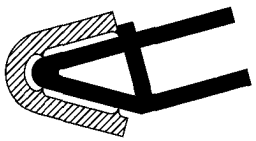

Footnotes

[1] See 'General Notes' on page 66 before using this table.

[2] Angles are measured with a protractor or with a gauge. A four point contact gauge is illustrated; two contact points being as close to the angle vertex as practicable, the others being near the ends of the respective surfaces forming the angle. Between these points of measurement, surface flatness is the controlling tolerance.

Table 21: Straightness Tolerances1 2 — All Extruded Products

	TOLERANCE (mm)	
	Allowable Deviation, D, from Straight	
6101 - T5		
6060 - T5 & T52		
All Other Alloys and Tempers	0.6	2 L

Footnotes:

[1] See 'General Notes' on page 66 before using this table.

[2] The mass of the extruded section must be supported on a flat surface in such a way to minimise the deviation. The method of measurement is illustrated below.

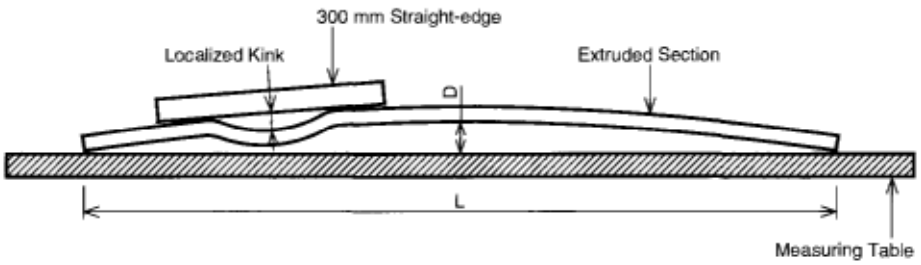

Table 22 Length Tolerances[1] – All Extruded Products

Circumscribing Circle Diameter (mm)			TOLERANCE							
			Allowable Deviation from Specified Length (mm)				Allowable Deviation from Specified Length (%)			
			Straight Length (metres)				**Coiled Length** (meters)			
		Over	-	4	10	15	-	30	75	150
Over	Up to	Up to	4	10	15	-	30	75	150	-
-	**30**		+ 3	+ 6	+ 10	+ 25	+ 5	± 10	± 15	± 20
30	**75**		+ 3	+ 6	+ 10	+ 25	-	-	-	-
75	**200**		+ 5	+ 8	+ 11	+ 25	-	-	-	-
200	**-**		+ 6	+ 10	+ 13	+ 25	-	-	-	-

Footnote: [1] See 'General Notes' on page 66 before using this table.

Table 23: Tolerance for Squareness of Cut Ends1 – All Extruded Products

TOLERANCE
Allowable Deviation from Square
1 degree

Footnote: [1] See 'General Notes' on page 66 before using this table.

Table 24: Contour (Curved Surface) Tolerances[1]
Solid Shapes, Class B, C and D Hollow Shapes

Definition[2]: A Contour is that portion of the outline of a transverse cross-section of an extruded shape that is represented by a continuous arc or a series of arcs.

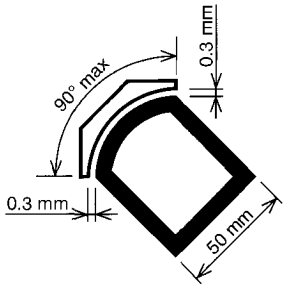

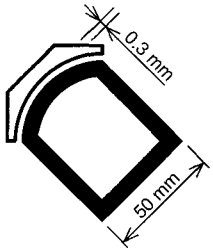

TOLERANCE

Allowable Deviation from Specified Contour[3]

0.15 mm per 25 mm of Chord Length (Minimum Tolerance = 0.15 mm)

Footnotes:

[1] See 'General Notes' on page 66 before using this table.
[2] Contoured surfaces that do not comply with this definition are subject to negotiation.
[3] As measured with a contour gauge, the surface of which is limited to a maximum subtended angle of 90°. Extruded curved surfaces comprising more than 90° subtended angle are checked by sliding the gauge across the surface, thus checking two or more 90° portions of the surface. The mass of the extruded section must be supported on a flat surface.

Table 25: Corner and Fillet Radii Tolerances[1] – All Extruded Products

Specified Radius (mm)		**TOLERANCE**
Over	Up to	Allowable Deviation from Specified Radius
-	5	± 0.4 mm
5	-	± 10%

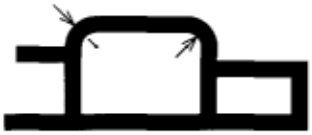

Footnote: [1] See 'General Notes' on page 66 before using this table.

Table 26: Twist Tolerances [1] [2] [3] — All Extruded Products

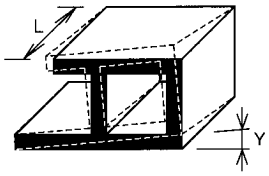

		TOLERANCE			
		Alloy and Temper –**6101 - T5** –**6063 - T5 & T52** –**6060 - T5 & T52**		All Other Alloys and Tempers	
Circumscribing Circle Diameter (mm)		Allowable Angular Deviation, Y (degrees)		Allowable Angular Deviation, Y (degrees)	
		In any	In Total	In any	In Total
Over	Up to	300 mm Length	Length of L metres	300 mm Length	Length of L metres
-	**40**	0.5	0.8 L (3° max)	1	3.3 L (7° max)
40	**75**	0.5	0.8 L (3° max)	0.5	1.7 L (5° max)
75	**175**	0.25	0.8 L (3° max)	0.25	0.8 L (3° max)
175	**250**	0.5	1.7 L (5° max)	0.5	1.7 L (5° max)
250	-	1	1.7 L (5° max)	1	3.3 L (7° max)

Footnotes:

[1] See 'General Notes' on page 66 before using this table.

[2] The mass of the extruded section must be supported on a flat surface in such a way as to minimise the deviation. The twist is determined by measuring the maximum distance between the bottom surface of the section and the flat supporting surface and subtracting from this measurement the section's deviation from true straightness.

[3] Table 27 may be used to convert the standard twist tolerance in degrees to an equivalent linear value, or to convert a measured linear value to degrees.

Table 27: Conversion of Angular Tolerances to Linear Values

To convert the standard twist tolerance in degrees to an equivalent linear value, the tangent of the tolerance is multiplied by the width of the bottom surface of the section supported on the flat surface.

For example:

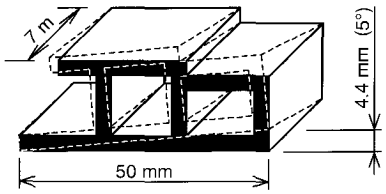

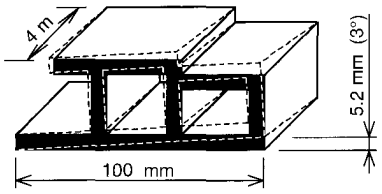

The following table may be used:

Twist Tolerance (degrees)	Equivalent Linear Value per mm of Section Width (mm)
0.25	0.004
0.5	0.009
0.75	0.013
1	0.017
1.25	0.022
1.5	0.026
1.75	0.031
2	0.035
2.25	0.039
2.5	0.044
2.75	0.048
3	0.052
3.5	0.061
4	0.07
4.5	0.079
5	0.087
6	0.105
7	0.123

Metal Surface Finishes for Extruded Products

THE TYPE OF FINISH AND ITS LIMITATIONS

Structural Finish	This finish is not controlled for uniformity of appearance. All extruded products are supplied in this finish unless otherwise specified.
Architectural Finish	A controlled finish of substantially uniform appearance; buffing will not produce a die-line-free finish unless a preliminary grinding or sanding operation is employed. This finish is normally satisfactory for the exposed surfaces of any architectural application other than feature components. It is applied to only those surfaces of the shape nominated by the purchaser.
Trim Finish	A special finish designed for subsequent polishing; buffing will normally produce a surface substantially free from die lines. This finish is normally satisfactory (after polishing) for critical applications such as domestic appliances and auto trim. It is available only up to a maximum width of any unbroken surface of 40 mm (i.e., broken by a lower grade of finish; a change of direction does not break the surface). A Trim finish is not acceptable for: 1. Hollow shapes. 2. Metal thickness below 1.3 mm. 3. Circumscribing circle diameters over 100 mm.

Typical Mechanical Properties (Extrusion alloys only)

The following typical mechanical properties are averages which take into account the variations introduced by the type of wrought product, size, shape and method of manufacture.

Table 28: Typical Mechanical Properties (Extrusion alloys only)

Alloy and Temper	Tensile Strength (MPa)		Elongation (% mm in 50 mm, 1.5 mm thick specimen)	Hardness[2]		Shear Strength, Ultimate (MPa)	Fatigue Strength Endurance Limit[3] (MPa)	Modulus of Elasticity[4] (MPa x10³)
	Ultimate	Yield		Vickers	Brinell (500 kg load 10 mm ball)			
2011 — T3	380	295	15[5]	110	95	221	124	70
— T4	310	145	20					70
— T6	395	270	17	110		234	124	70
— T8	405	310	12[5]	105	100	241	124	70
2014 — T4	425	290	20[5]	130	105	262	138	73
— T451	425	290	20[5]	130	105	262	138	73
— T6	495	450	13[5]	145	135	290	124	73
— T651	495	450	13[5]	145	135	290	124	73
2024 — 0	185	75	20		47	124	90	73
— T42	470	325	20		120	283	138	73
6005A— T5	285	265	12					
— T6								
6060 — O	90	50	30					
— T1	150	70	20					
— T5	220	180	12	70	68			
— T52	190	130	15					
— T6								
6061 — O	125	55	25		30	83	62	69
— T4	240	145	22		65	165	97	69
— T6	310	275	12		95	207	97	69
6063 — O	90	50	30	30	25	69	55	69
— T1	150	90	20	45	42	97	62	69
— T4	170	90	22		48	110	69	69
— T5	220	180	12			117	69	69
— T6	240	215	12		73	152	69	69
6082 — T1	270	150	20					69
— T5	315	285	12					69
— T6	340	315	12		95	215	95	69
6101 — H111		75						69
— T5	205	180	12	75		138	69	69
— T6	220	195	12	75	71	138	69	69
— T61	170	140	22[5]					69
— T64	115	60	24[5]					69
6106 — T4	180	90	22					
— T6	250	230	13					
6201A— T8	310	290	4					69
— T81	330	310	4					69
6262 — T6	310	275	12	100		207	97	69
— T91	350	320	10	110		241	90	69
6351 — 14	240	165	20	70	65	165	97	69
— T5	310	275	12	103	95	207	97	69
— T6	330	310	11					69

Alloy and Temper	Tensile Strength (MPa)		Elongation (% mm in 50 mm, 1.5 mm thick specimen)	Hardness[2]		Shear Strength, Ultimate (MPa)	Fatigue Strength Endurance Limit[3] (MPa)	Modulus of Elasticity[4] (MPa x10^3)
	Ultimate	Yield		Vickers	Brinell (500 kg load 10 mm ball)			
6463A—T1	150	90	20		42	97	69	69
— T5	220	180	12		60	117	69	69
— T6	240	215	12		74	152	69	69
7005 - T53	395	345	15			220		71
7075 — O	230	105	17	14	60	150		72
— T6	570	505	11	9	150	330	160	72
— T651	570	505	11	9	150	330	160	72

Footnotes

[1]These typical properties are averages (at 25°C) for various forms, sizes and methods of manufacture and may not exactly describe any one particular product. Typical tensile strength and elongation properties **should not be used for design purposes**.

[2]Hardness is commonly reported n either of the two units quoted. A complete listing in both units is not given because of difficulties of exact correlation between the two systems.

[3]Based on 500,000,000 cycles of completely reversed stress using the R. R. Moore type of machine and specimen.

[4]Average of tension and compression moduli. Compression modulus is about 2% greater than tension modulus.

[5]Round test specimens used.

[6]Unless otherwise stated all data is based on an ambient temperature of 25°C.

Typical Physical Properties (Extrusion Alloys only)

Table 29: Typical Physical Properties - Not for Design

Alloy and Temper	Thermal Conductivity at 25°C (W/(m.K))	Electrical Conductivity[1] at 20°C (MS/m)	Electrical Resistivity at 20°C (μΩ.m)	Density (kg/m³ x10³)	Coefficient of Thermal Expansion[2] per °C	Melting Range, approximate (°C)
1050 —O	234	35	0.028	2.70	24.0	650—660
— H18	230	35	0.029			
1080A — O	234	36	0.028	2.70	24.0	645
— H18	230	35	0.028			
1100 — O	222	34	0.029	2.71	23.6	645—655
— H18	218	33	0.030			
1145 — O	234	35	0.028	2.70	24.0	650—660
— H18	230	35	0.029			
1150 — O	222	34	0.029	2.70	24.0	645—655
— H18	218	33	0.030			
1199 — All tempers	239	37	0.026	2.70	23.6	660
1200 — O	222	34	0.029	2.71	24.0	645—655
— H18	218	33	0.030			
1350 — All tempers	234	36	0.028	2.70	23.8	645—655
2011 — T3	151	23	0.044	2.82	22.8	535—645
— T8	172	26	0.038			
2014 — T4	134	20	0.051	2.80	23.0	510—640
— T6	155	23	0.043			
2014A — T4	134	20	0.051	2.80	23.0	510—640
— T6	155	23	0.043			
2024 — 0	193	29	0.034	2.77	23.2	500—640
— T42	121	17	0.057	2.77	23.2	500—640
—T62	151	22	0.045	2.77	23.2	500—640
4043 — F	163	24	0.041	2.69	22.0	575—630
4047 — F	155	21	0.047	2.66	22.0	575
4343A — F	159	23	0.044	2.68	22.0	575—610
4543 — All tempers	163	24	0.041	2.69	22.0	575—630
6060 — O	218	34	0.030	2.70	23.4	615—650
— T1	193	29	0.034			
— T5	209	32	0.031			
6061 — O	180	27	0.037	2.70	23.6	580—650
— T4	155	23	0.043			
— T6	167	25	0.040			
6063 — O	218	34	0.030	2.70	23.4	615—650
— T1	193	29	0.034			
— T5	209	32	0.031			
— T6	201	31	0.033			
6082 — T1	165	23.8	0.043	2.70	24.0	
— T6	174		0.042	2.71	23.5	
6101 — H111	226	35	0.029	2.70	23.4	615—650
— T5	218	33	0.030			
— T6	218	33	0.030			
— T61	222	34	0.029			
— T64	226	35	0.029			
6201A — T8		32	0.031	2.70	23.6	615—650
— T81		31	0.032			

Alloy and Temper		Thermal Conductivity at 25°C (W/(m.K))	Electrical Conductivity[1] at 20°C (MS/m)	Electrical Resistivity at 20°C (μΩ.m)	Density (kg/m³ x10³)	Coefficient of Thermal Expansion[2] per °C	Melting Range, approximate (°C)
6262	**— T6**	167	25	0.040	2.72	23.4	580—650
	— T91	172	26	0.039			
6351	**— T4**	163	26	0.034	2.70	23.0	555—650
	— T6	172	28	0.036			
7005	**-- T53**	148	22	0.045	2.78	23.1	600-645
7075	**— T6**	130	19.2	0.052	2.8	23.5	475-630

Footnotes

[1] For comparative purposes, the electrical conductivity of the value of 100% of the International Annealed Copper Standard is 58 MS/m.

[2] Figures are average in the temperature range 20°C-100°C.The coefficient tabulated must be multiplied by 10^{-6}; e.g., 23.6 x 10^{-6} = 0.0000236.

Typical Heat Treatments (Extrusion alloys only)

Table 30: Typical Annealing Conditions for Aluminium Alloy Mill Products
(Annealing to 0 Temper from Any Other Temper)

Alloy	Metal Temperature (°C)	Time at Temperature[1] (Hours)	Cooling Rate
1350	350	0.5-2	Note[2]
2011,2014,2024	410	2—3	Note[3]
6005A, 6060, 6061 **6063, 6082**	410	2—3	
6101	410	2—3	Note[3]
6106, 6201A, 6261 **6262, 6351, 6463A**	410	2—3	

Footnotes

[1] For those alloys where time at temperature is shown as 0.5-2 hours, the time need not be longer than that required to bring all parts of the load to the annealing temperature.
[2] Rate of cooling is unimportant.
[3] Controlled cooling is required to remove the effect of solution treatment. A maximum cooling rate of 20°C per hour must be maintained until a temperature of about 290°C is reached. Below this temperature the rate for cooling is unimportant. To remove the effects of cold work, or to partially remove the effects of heat treatment, heating at 345°C for 2-3 hours followed by uncontrolled cooling, is sufficient.

Typical Heat Treatment Conditions (Extrusion alloys only)

Table 31: Typical Solution Heat Treatments and Age Hardening Treatments for Aluminium Alloy Mill Products

Alloy And Temper	Solution Treatment Temperature[123] (°C)	Aging Temperature (°C)	Time
2011,2014 2024 – T42	525	Ambient	5 Days
2011 - T62	505	160	14 Hours
2014 – T62	505	160	18 Hours
2024 - T62	495	190	9 Hours
6005A,6060, 6061,6063, 6082,6106, 6262,6253, 6261,6262, 6351 – T42	520	Ambient	5 Days
6005A,6060, 6061,6063, 6082,6101 6106,6261 6262,6351 - T62	520	175	8 Hours

Footnotes

[1] The required time at temperature depends on the thickness of the product.

[2] Material should be quenched from the solution treatment temperature as rapidly as possible and with minimum delay after removal from the furnace. Unless otherwise indicated, when material is quenched by total immersion in water, the water should be at ambient temperature and be suitably cooled, or of such volume so as to remain below 37°C during the whole quench cycle.

[3] The nominal metal temperatures should be attained as rapidly as possible and be maintained within ±5°C during the time at nominal temperature.

Typical Tensile Properties at Various Temperatures (Extrusion alloys only)

The following typical properties are not guaranteed since in most cases they are averages for various sizes, product forms and methods of manufacture and may not be exactly representative of any particular product or size. These data are intended only as a basis for comparing alloys and tempers and should not be specified as engineering requirements or used for design purposes.

Table 32 Typical Tensile Properties at Various Temperatures[1]

Alloy and Temper	Temperature (°C)	Tensile Strength (MPa)		Elongation in 50mm (%)
		Ultimate	Yield[2]	
2011 – T3	25	380	295	15
	100	325	235	16
	150	195	130	25
	205	110	75	35
	260	45	25	45
	315	20	10	90
	370	15	10	125
2014 – T6	-195	580	495	14
– T651	-80	510	450	13
	-30	495	425	13
	25	485	415	13
	100	435	395	15
	150	275	240	20
	205	110	90	38
	260	65	50	52
	315	45	35	65
	370	30	25	72
2024 –T4	-195	580	420	19
	-80	490	340	19
	-30	475	325	19
	25	470	325	19
	100	435	310	19
	150	310	250	17
	205	180	130	27
	260	75	60	55
	315	50	40	75
	370	35	30	100
6351 – T5	-195	405	325	17
	-80	350	305	10
	-30	330	295	11
	25	310	285	11
	100	285	270	12
	150	170	150	18
	205	65	50	35

Alloy and Temper	Temperature (°C)	Tensile Strength (MPa)		Elongation in 50mm (%)
		Ultimate	Yield[2]	
6351 – T6	-195	435	365	14
	-80	370	330	10
	-30	350	325	10
	25	330	310	11
	100	295	290	12
	150	185	165	18
6061 – T6	-195	415	325	22
–T651	-80	340	290	18
	-30	325	285	17
	25	310	275	17
	100	290	260	18
	150	235	215	20
	205	130	105	28
	260	50	35	60
	315	30	20	85
	370	20	10	95
6262 – T91	-195	445	390	14
	-80	375	340	10
	-30	360	325	10
	25	350	320	10
	100	320	305	10
	150	230	215	14
	205	90	75	34
6063 – T1	-195	235	110	44
	-80	180	105	36
	-30	165	95	34
	25	150	90	33
	100	150	95	18
	150	145	105	20
	205	60	45	40
	260	30	25	75
	315	20	15	80
	370	15	15	105
6063 – T5	-195	290	200	28
	-80	235	185	24
	-30	230	185	23
	25	220	180	22
	100	195	170	18
	150	160	150	20
	205	60	45	40
	260	30	25	75
	315	20	15	80
	370	15	15	105

Alloy and Temper	Temperature (°C)	Tensile Strength (MPa)		Elongation in 50mm (%)
		Ultimate	Yield[2]	
6063 – T6	-195	325	250	24
	-80	260	230	20
	-30	250	220	19
	25	240	215	18
	100	215	195	15
	150	145	140	20
	205	60	45	40
	260	30	25	75
	315	25	15	80
	370	15	15	105

Footnotes

[1] These data are based on a limited amount of testing and represent the lowest strength during 10,000 hours of exposure at testing temperature under no load; stress applied at 34.5 MPa/minute to yield strength and then at strain rate of 0.05 mm/minute to failure. Under some conditions of temperature and time, the application of heat will adversely affect certain other properties of some alloys.

[2] Offset = 0.2%.

PROPERTIES OF STANDARD EXTRUSION SHAPES

N.B. This section contains a selection of shapes from the original “Engineers Handbook Aluminium”, (first published in February 1979, reprinted March 1982, second edition April 1986). For other shapes or dies, please contact your supplier, or calculate using engineering packages.

Angles – Architectural

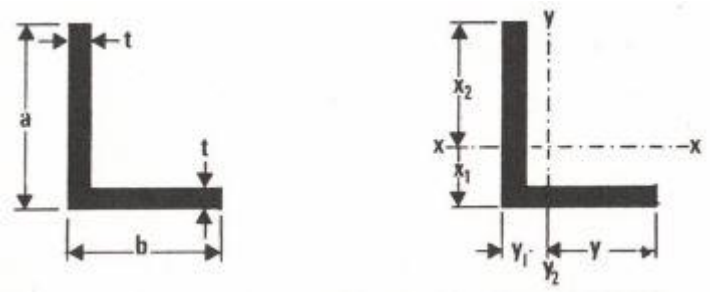

Angles - Architectural

Size	Thick-ness	Mass per Metre	Area	Distance of neutral axis from extreme fibres				Second moment of Area		Radius of Gyration		Moduli of Section			
a x b mm	t mm	kg/m	mm^2	X_1 mm	X_2 mm	Y_1 mm	Y_2 mm	I_x mm^4	I_y mm^4	r_x mm	r_y mm	Zx_1 mm^3	Zx_2 mm^3	Zy_1 mm^3	Zy_2 mm^3
12 x 10	3.0	0.154	57.00	4.34	7.66	3.34	6.66	716	444	3.55	2.79	165	94	133	67
12 x 12	1.6	0.097	35.84	3.59	8.41	3.59	8.41	475	475	3.64	3.64	132	56	132	56
12 x 12	2.5	0.145	53.75	3.90	8.10	3.90	8.10	672	672	3.53	3.53	172	83	172	83
12 x 12	3.0	0.170	63.00	4.07	7.93	4.07	7.93	765	765	3.48	3.48	188	96	188	96
20 x 12	1.6	0.131	48.64	6.85	13.15	2.85	9.15	1997	551	6.41	3.37	291	152	193	60
20 x 12	2.5	0.199	73.75	7.18	12.82	3.18	8.82	2912	784	6.28	3.26	405	227	247	89

Angles - Architectural

Size	Thick-ness	Mass per Metre	Area	Distance of neutral axis from extreme fibres				Second moment of Area		Radius of Gyration		Moduli of Section			
a x b	t	kg/m	mm^2	X_1	X_2	Y_1	Y_2	I_x	I_y	r_x	r_y	Zx_1	Zx_2	Zy_1	Zy_2
mm	mm			mm	mm	mm	mm	mm^4	mm^4	mm	mm	mm^3	mm^3	mm^3	mm^3
20 x 12	3.0	0.235	87.00	7.36	12.64	3.36	8.64	3366	898	6.22	3.21	457	266	267	104
25 x 12	1.6	0.153	56.64	9.06	15.94	2.56	9.44	3695	581	8.08	3.20	408	232	227	62
25 x 12	3.0	0.275	102.00	9.59	15.41	3.09	8.91	6329	953	7.88	3.06	660	411	309	107
32 x 12	1.6	0.183	67.84	12.27	19.73	2.27	9.73	6502	613	9.79	3.01	530	330	270	63
32 x 12	3.0	0.332	123.00	12.82	19.18	2.82	9.18	12642	1013	10.14	2.87	986	659	360	110
40 x 12	1.6	0.218	80.64	16.04	23.96	2.04	9.96	8072	639	10.00	2.82	503	337	314	64
40 x 12	3.0	0.397	147.00	16.60	23.40	2.60	9.40	23564	1066	12.66	2.69	1419	1007	410	113
50 x 12	1.6	0.261	96.64	20.83	29.17	1.83	10.17	24738	663	16.00	2.62	1187	848	362	65
50 x 12	3.0	0.478	177.00	21.42	28.58	2.42	9.58	43908	1119	15.75	2.51	2050	1536	463	117
16 x 16	1.6	0.131	48.64	4.59	11.41	4.59	11.41	4180	4180	9.27	9.27	911	366	911	366
16 x 16	3.0	0.235	87.00	5.09	10.91	5.09	10.91	1963	1963	4.75	4.75	386	180	386	180
25 x 16	1.6	0.170	63.04	8.22	16.78	3.72	12.28	4089	1342	8.05	4.61	497	244	360	109
25 x 16	2.5	0.260	96.25	8.56	16.44	4.06	11.94	6047	1948	7.93	4.50	707	368	480	163
25 x 16	3.0	0.308	114.00	8.74	16.26	4.24	11.76	7038	2247	7.86	4.44	805	433	530	191
20 x 20	1.6	0.166	61.44	5.59	14.41	5.59	14.41	2371	2371	6.21	6.21	424	165	424	165
20 x 20	3.0	0.300	111.00	6.10	13.90	6.10	13.90	4029	4029	6.03	6.03	661	290	661	290
25 x 20	1.6	0.187	69.44	7.54	17.46	5.04	14.96	4411	2535	7.97	6.04	585	253	503	169

Angles - Architectural

Size	Thick-ness	Mass per Metre	Area	Distance of neutral axis from extreme fibres				Second moment of Area		Radius of Gyration		Moduli of Section			
a x b	t	kg/m	mm^2	X_1	X_2	Y_1	Y_2	I_x	I_y	r_x	r_y	Zx_1	Zx_2	Zy_1	Zy_2
mm	mm			mm	mm	mm	mm	mm^4	mm^4	mm	mm	mm^3	mm^3	mm^3	mm^3
25 x 20	2.5	0.287	106.30	7.87	17.13	5.37	14.63	6535	3722	7.84	5.92	831	381	693	254
25 x 20	3.0	0.340	126.00	8.05	16.95	5.55	14.45	7617	4320	7.78	5.86	946	449	779	299
32 x 20	1.6	0.218	80.64	10.45	21.55	4.45	15.55	8694	2711	10.38	5.80	832	403	609	174
32 x 20	2.5	0.334	123.80	10.78	21.22	4.78	15.22	13004	3987	10.25	5.68	1206	613	833	262
32 x 20	3.0	0.397	147.00	10.97	21.03	4.97	15.03	15224	4631	10.18	5.61	1388	724	932	308
40 x 20	1.6	0.252	93.44	13.95	26.05	3.95	16.05	15972	2860	13.07	5.53	1145	613	724	178
40 x 20	3.0	0.462	171.00	14.48	25.52	4.48	15.52	28289	4898	12.86	5.35	1953	1109	1093	316
50 x 20	1.6	0.295	109.40	18.49	31.51	3.49	16.51	29276	3000	16.36	5.24	1583	929	860	182
50 x 20	3.0	0.543	201.00	19.04	30.96	4.04	15.96	52309	5147	16.13	5.06	2748	1689	1275	322
70 x 20	1.6	0.382	141.40	27.88	42.12	2.88	17.12	73010	3186	22.72	4.75	2619	1733	1106	186
70 x 20	3.0	0.705	261.00	28.45	41.55	3.45	16.55	131840	5489	22.48	4.59	4633	3173	1589	332
80 x 20	3.0	0.786	291.00	33.25	46.75	3.25	16.75	190376	5614	25.58	4.39	5725	4072	1726	335
25 x 25	1.6	0.209	77.44	6.84	18.16	6.84	18.16	4739	4739	7.82	7.82	693	261	693	261
25 x 25	2.5	0.321	118.80	7.17	17.83	7.17	17.83	7032	7032	7.69	7.69	981	394	981	394
25 x 25	3.0	0.381	141.00	7.35	17.65	7.35	17.65	8204	8204	7.63	7.63,	1116	465	1116	465
25 x 25	4.0	0.497	184.00	7.71	17.29	7.71	17.29	10352	10352	7.50	7.50	1343	599	1343	599
25 x 25	6.0	0.713	264.00	8.40	16.60	8.40	16.60	13999	13999	7.28	7.28	1667	843	1667	843

Angles - Architectural

Size	Thick-ness	Mass per Metre	Area	Distance of neutral axis from extreme fibres				Second moment of Area		Radius of Gyration		Moduli of Section			
a x b	t	kg/m	mm^2	X_1	X_2	Y_1	Y_2	I_x	I_y	r_x	r_y	Zx_1	Zx_2	Zy_1	Zy_2
mm	mm			mm	mm	mm	mm	mm^4	mm^4	mm	mm	mm^3	mm^3	mm^3	mm^3
32 x 25	3.0	0.437	162.00	10.09	21.91	6.59	18.41	16463	8844	10.08	7.39	1631	752	1341	480
40 x 25	1.6	0.274	101.40	12.91	27.09	5.41	19.59	17248	5412	13.04	7.30	1336	637	1000	276
40 x 25	3.0	0.502	186.00	13.44	26.56	5.94	19.06	30625	9406	12.83	7.11	2280	1153	1585	493
40 x 25	4.0	0.659	244.00	13.80	26.20	6.30	18.70	39294	11908	12.69	6.99	2847	1500	1889	637
50 x 25	1.6	0.317	117.40	17.29	32.71	4.79	20.21	31611	5710	16.41	6.97	1829	966	1193	282
50 x 25	3.0	0.583	216.00	17.82	32.18	5.32	19.68	56614	9937	16.19	6.78	3177	1759	1868	505
60 x 25	3.0	0.664	246.00	22.35	37.65	4.85	20.15	93271	10342	19.47	6.48	4172	2478	2131	513
32 x 32	3.0	0.494	183.00	9.11	22.89	9.11	22.89	17851	17851	9.88	9.88	1960	780	1960	780
32 x 32	4.0	0.648	240.00	9.47	22.53	9.47	22.53	22778	22778	9.74	9.74	2406	1011	2406	1011
32 x 32	6.0	0.940	348.00	10.17	21.83	10.17	21.83	31401	31401	9.50	9.50	3087	1439	3087	1439
40 x 32	1.6	0.304	112.60	11.71	28.29	7.71	24.29	18732	10835	12.90	9.81	1600	662	1405	446
40 x 32	3.0	0.559	207.00	12.23	27.77	8.23	23.77	33325	19097	12.69	9.61	2726	1200	2322	803
40 x 40	1.6	0.339	125.40	10.60	29.40	10.60	29.40	20102	20102	12.66	12.66	1897	684	1897	684
40 x 40	3.0	0.624	231.00	11.11	28.89	11.11	28.89	35820	35820	12.45	12.45	3224	1240	3224	1240
40 x 40	4.0	0.821	304.00	11.47	28.53	11.47	28.53	46079	46079	12.31	12.31	4016	1615	4016	1615
40 x 40	6.0	1.199	444.00	12.19	27.81	12.19	27.81	64482	64482	12.05	12.05	5290	2319	5290	2319
50 x 40	3.0	0.705	261.00	15.01	34.99	10.01	29.99	66561	38292	15.97	12.11	4436	1902	3827	1277

Angles - Architectural

Size	Thick-ness	Mass per Metre	Area	Distance of neutral axis from extreme fibres				Second moment of Area		Radius of Gyration		Moduli of Section			
a x b	t	kg/m	mm^2	X_1	X_2	Y_1	Y_2	I_x	I_y	r_x	r_y	Zx_1	Zx_2	Zy_1	Zy_2
mm	mm			mm	mm	mm	mm	mm^4	mm^4	mm	mm	mm^3	mm^3	mm^3	mm^3
50 x 40	4.0	0.929	344.00	15.37	34.63	10.37	29.63	86148	49308	15.82	11.97	5604	2488	4754	1664
50 x 40	6.0	1.361	504.00	16.10	33.90	11.10	28.90	121887	69126	15.55	11.71	7573	3595	6230	2391
60 x 40	4.0	1.037	384.00	19.50	40.50	9.50	30.50	142752	51872	19.28	11.62	7321	3525	5460	1701
60 x 40	6.0	1.523	564.00	20.23	39.77	10.23	29.77	203538	72818	19.00	11.36	10059	5118	7115	2446
80 x 40	4.0	1.253	464.00	28.21	51.79	8.21	31.79	314260	55702	26.02	10.96	11141	6068	6787	1752
80 x 40	6.0	1.847	684.00	28.96	51.04	8.96	31.04	452592	78354	25.72	10.70	15625	8868	8740	2525
80 x 40	8.0	2.419	896.00	29.71	50.29	9.71	30.29	579697	98406	25.45	10.48	19509	11528	10130	3249
50 x 50	1.6	0.425	157.40	13.10	36.90	13.10	36.90	39727	39727	15.88	15.88	3033	1077	3033	1077
50 x 50	3.0	0.786	291.00	13.61	36.39	13.61	36.39	71497	71497	15.67	15.67	5252	1965	5252	1965
50 x 50	4.0	1.037	384.00	13.98	36.02	13.98	36.02	92610	92610	15.53	15.53	6625	2571	6625	2571
50 x 50	6.0	1.523	564.00	14.70	35.30	14.70	35.30	131260	131260	15.26	15.26	8928	3719	8928	3719
80 x 50	6.0	2.009	744.00	26.87	53.13	11.87	38.13	489962	150483	25.66	14.22	18234	9222	12677	3947
80 x 50	8.0	2.635	976.00	27.61	52.39	12.61	37.39	628646	190499	25.38	13.97	22771	11999	15111	5095
100 x 50	6.0	2.333	864.00	35.64	64.36	10.64	39.36	905768	158973	32.38	13.56	25415	14073	14943	4039
100 x 50	8.0	3.067	1136.00	36.39	63.61	11.39	38.61	1169176	201555	32.08	13.32	32126	18382	17690	5221
125 x 50	3.0	1.393	516.00	45.83	79.17	8.33	41.67	869700	90285	41.05	13.23	18976	10985	10837	2167
125 x 50	6.0	2.738	1014.00	47.01	77.99	9.51	40.49	1668634	166881	40.57	12.83	35496	21395	17550	4121

Angles - Architectural

Size	Thick-ness	Mass per Metre	Area	Distance of neutral axis from extreme fibres				Second moment of Area		Radius of Gyration		Moduli of Section			
a x b	t	kg/m	mm^2	X_1	X_2	Y_1	Y_2	I_x	I_y	r_x	r_y	Zx_1	Zx_2	Zy_1	Zy_2
mm	mm			mm	mm	mm	mm	mm^4	mm^4	mm	mm	mm^3	mm^3	mm^3	mm^3
60 x 60	3.0	0.948	351.00	16.12	43.88	16.12	43.88	125361	125361	18.90	18.90	7779	2857	7779	2857
60 x 60	6.0	1.847	684.00	17.21	42.79	17.21	42.79	233275	233275	18.47	18.47	13554	5452	13554	5452
80 x 80	6.0	2.495	924.00	22.22	57.78	22.22	57.78	573082	573082	24.90	24.90	25790	9919	25790	9919
80 x 80	8.0	3.283	1216.00	22.95	57.05	22.95	57.05	737319	737319	24.62	24.62	32131	12923	32131	12923
80 x 80	10	4.050	1500.00	23.67	56.33	23.67	56.33	889810	889810	24.36	24.36	37597	15796	37597	15796
125 x 80	8.0	4.255	1576.00	41.12	83.88	18.62	61.38	2555964	838954	40.27	23.07	62160	30471	45059	13668
125 x 80	10	5.286	1958.00	41.74	83.26	19.33	60.67	3124112	1014728	39.95	22.77	74849	37522	52503	16725
100 x 100	8.0	4.147	1536.00	27.96	72.04	27.96	72.04	1481124	1481124	31.05	31.05	52977	20559	52977	20559
100 x 100	10	5.130	1900.00	28.68	71.32	28.68	71.32	1800067	1800067	30.78	30.78	62755	25241	62755	25241

Angles – Structural

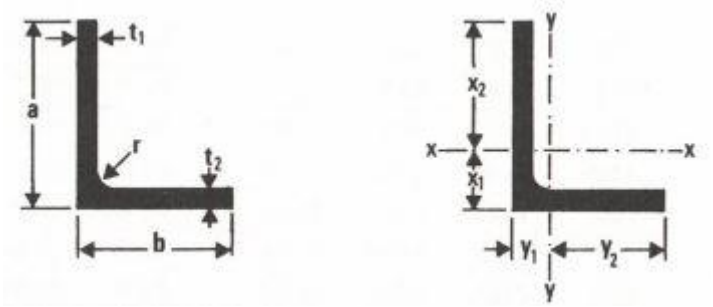

Angles - Structural

Size	Thick-ness	Root Rad.	Mass per Metre	Area	Distance of neutral axis from extreme fibres				Second moment of Area		Radius of Gyration		Moduli of Section			
a x b	t	r	kg/m	mm^2	X_1	X_2	Y_1	Y_2	I_x	I_y	r_x	r_y	Zx_1	Zx_2	Zy_1	Zy_2
mm	mm	mm			mm	mm	mm	mm	mm^4	mm^4	mm	mm	mm^3	mm^3	mm^3	mm^3
12 x 10	3.0	2.5	0.158	58.34	4.32	7.68	3.35	6.65	737	445	3.56	2.76	171	96	133	67
12 x 12	1.6	1.6	0.098	36.39	3.56	**8.44**	3.56	8.44	477	477	3.62	3.62	134	56	134	56
12 x 12	2.5	2.5	0.149	55.09	3.88	8.12	3.88	8.12	673	673	3.49	3.49	173	83	173	83
12 x 12	3.0	2.5	0.174	64.34	4.06	7.94	4.06	7.94	766	766	3.45	3.45	189	97	189	97
20 x 12	1.6	1.6	0.133	49.19	6.80	13.20	2.84	9.16	2010	551	6.39	3.35	296	152	194	60
20 x 12	2.5	2.5	0.214	79.09	6.75	13.25	3.18	8.82	3126	785	6.29	3.15	463	236	247	89
20 x 12	3.0	2.5	0.239	88.34	7.30	12.70	3.36	8.64	3385	898	6.19	3.19	464	267	268	104
25 x 12	1.6	1.6	0.154	57.19	8.99	16.01	2.56	9.44	3723	582	8.07	3.19	414	233	228	62
25 x 12	3.0	2.5	0.279	103.30	9.51	15.49	3.09	8.91	6377	954	7.86	3.04	671	412	308	107

Angles - Structural

Size	Thick-ness	Root Rad.	Mass per Metre	Area	Distance of neutral axis from extreme fibres				Second moment of Area		Radius of Gyration		Moduli of Section			
a x b mm	t mm	r mm	kg/m	mm^2	X_1 mm	X_2 mm	Y_1 mm	Y_2 mm	I_x mm^4	I_y mm^4	r_x mm	r_y mm	Zx_1 mm^3	Zx_2 mm^3	Zy_1 mm^3	Zy_2 mm^3
32 x 12	1.6	1.6	0.185	68.39	12.19	19.81	2.27	9.73	7332	613	10.35	2.99	602	370	270	63
32 x 12	3.0	2.5	0.336	124.30	12.72	19.28	2.82	9.18	12757	1014	10.13	2.86	1003	662	359	111
40 x 12	1.6	1.6	0.219	81.19	15.94	24.06	2.04	9.96	8180	639	10.04	2.81	513	340	314	64
40 x 12	3.0	2.5	0.401	148.30	16.48	23.52	2.61	9.39	23791	1067	12.66	2.68	1443	1012	409	114
50 x 12	1.6	1.6	0.262	97.19	20.73	29.27	1.83	10.17	24934	663	16.02	2.61	1203	852	361	65
50 x 12	3.0	2.5	0.482	178.30	21.28	28.72	2.42	9.58	44331	1120	15.77	2.51	2083	1544	462	117
16 x 16	1.6	1.6	0.133	49.19	4.56	11.44	4.56	11.44	1184	1184	4.91	4.91	246	98	246	98
16 x 16	3.0	2.5	0.239	88.34	5.06	10.94	5.06	10.94	1966	1966	4.72	4.72	388	180	388	180
25 x 16	1.6	1.6	0.172	63.59	8.17	16.83	3.71	12.29	4111	1344	8.04	4.60	503	244	362	109
25 x 16	2.5	2.5	0.264	97.59	8.48	16.52	4.04	11.96	6086	1950	7.90	4.47	718	368	482	163
25 x 16	3.0	2.5	0.311	115.30	8.68	16.32	4.23	11.77	7073	2248	7.83	4.42	815	433	532	191
20 x 20	1.6	1.6	0.167	61.99	5.56	14.44	5.56	14.44	2378	2378	6.19	6.19	428	165	428	165
20 x 20	3.0	2.5	0.303	112.30	6.06	13.94	6.06	13.94	4039	4039	6.00	6.00	666	290	666	290
25 x 20	1.6	1.6	0.189	69.99	7.50	17.50	5.02	14.98	4428	2541	7.95	6.02	591	253	507	170
25 x 20	2.5	2.5	0.291	107.60	7.81	17.19	5.34	14.66	6566	3730	7.81	5.89	841	382	699	254
25 x 20	3.0	2.5	0.344	127.30	8.00	12.00	5.53	14.47	7645	4325	7.75	5.83	956	637	783	299
32 x 20	1.2	1.6	0.166	61.51	10.22	21.78	4.28	15.72	6691	2094	10.43	5.84	655	307	490	133
32 x 20	1.6	1.6	0.219	81.19	10.39	21.61	4.43	15.57	8734	2714	10.37	5.78	840	404	612	174

Angles - Structural

Size	Thick-ness	Root Rad.	Mass per Metre	Area	Distance of neutral axis from extreme fibres				Second moment of Area		Radius of Gyration		Moduli of Section			
a x b	t	r	kg/m	mm^2	X_1	X_2	Y_1	Y_2	I_x	I_y	r_x	r_y	Zx_1	Zx_2	Zy_1	Zy_2
mm	mm	mm			mm	mm	mm	mm	mm^4	mm^4	mm	mm	mm^3	mm^3	mm^3	mm^3
32 x 20	2.5	2.5	0.338	125.10	10.70	21.30	4.77	15.23	13081	3991	10.23	5.65	1222	614	837	262
32 x 20	3.0	2.5	0.401	148.30	10.90	21.10	4.96	15.04	15307	4633	10.16	5.59	1404	726	935	308
40 x 20	1.6	1.6	0.254	93.99	13.88	26.12	3.94	16.06	16051	2863	13.07	5.52	1156	615	727	178
40 x 20	3.0	2.5	0.465	172.30	14.40	25.60	4.48	15.52	28449	4899	12.85	5.33	1976	1111	1095	316
50 x 20	1.6	1.6	0.297	110.00	18.41	31.59	3.48	16.52	29424	3001	16.36	5.22	1598	931	862	182
50 x 20	3.0	2.5	0.546	202.30	18.94	31.06	4.03	15.97	52624	5148	16.13	5.04	2779	1694	1276	322
70 x 20	1.6	1.6	0.383	142.00	27.78	42.22	2.88	17.12	73376	3186	22.73	4.74	2641	1738	1107	186
70 x 20	3.0	2.5	0.708	262.30	28.33	41.67	3.46	16.54	132663	5489	22.49	4.57	4683	3183	1589	332
80 x 20	3.0	2.5	0.789	292.30	33.12	46.88	3.25	16.75	191569	5615	25.60	4.38	5785	4086	1726	335
25 x 25	1.6	1.6	0.211	77.99	6.81	18.19	6.81	18.19	4752	4752	7.81	7.81	698	261	698	261
25 x 25	2.5	2.5	0.324	120.10	7.12	17.88	7.12	17.88	7054	7054	7.66	7.66	990	395	990	395
25 x 25	3.0	2.5	0.384	142.30	7.32	17.68	7.32	17.68	8224	8224	7.60	7.60	1124	465	1124	465
25 x 25	4.0	2.5	0.500	185.30	7.68	17.32	7.68	17.32	10366	10366	7.48	7.48	1349	599	1349	599
25 x 25	6.0	4.0	0.722	267.40	8.38	16.62	8.38	16.62	14012	14012	7.24	7.24	1672	843	1672	843
32 x 25	3.0	2.5	0.441	163.30	10.04	21.96	6.57	18.43	16522	8857	10.06	7.36	1646	752	1349	481
40 x 25	1.6	1.6	0.275	102.00	12.86	27.14	5.40	19.60	17314	5419	13.03	7.29	1347	638	1005	276
40 x 25	3.0	2.5	0.506	187.30	13.36	26.64	5.92	19.08	30752	9414	12.81	7.09	2301	1155	1591	493
40 x 25	4.0	2.5	0.662	245.30	13.75	26.25	6.29	18.71	39404	11910	12.67	6.97	2865	1501	1892	637

Angles - Structural

Size	Thick-ness	Root Rad.	Mass per Metre	Area	Distance of neutral axis from extreme fibres				Second moment of Area		Radius of Gyration		Moduli of Section			
a x b	t	r	kg/m	mm^2	X_1	X_2	Y_1	Y_2	I_x	I_y	r_x	r_y	Zx_1	Zx_2	Zy_1	Zy_2
mm	mm	mm			mm	mm	mm	mm	mm^4	mm^4	mm	mm	mm^3	mm^3	mm^3	mm^3
50 x 25	1.6	1.6	0.319	118.00	17.21	32.79	4.77	20.23	31738	5715	16.40	6.96	1844	968	1198	283
50 x 25	3.0	2.5	0.587	217.30	17.71	32.27	5.31	19.69	56886	9939	16.18	6.76	3208	1763	1872	505
60 x 25	3.0	2.5	0.668	247.30	22.25	37.75	4.85	20.15	93744	11176	19.47	6.72	4213	2483	2306	555
32 x 32	3.0	2.5	0.498	184.30	9.07	22.93	9.07	22.93	17895	17895	9.85	9.85	1974	780	1974	780
32 x 32	4.0	2.5	0.652	241.30	9.44	22.56	9.44	22.56	22814	22814	9.72	9.72	2417	1011	2417	1011
32 x 32	6.0	4.0	0.949	351.40	10.14	21.86	10.14	21.86	31439	31439	9.46	9.46	3100	1438	3100	1438
40 x 32	1.6	1.6	0.306	113.20	11.66	28.34	7.68	24.32	18783	10853	12.88	9.79	1611	663	1413	446
40 x 32	3.0	2.5	0.563	208.30	12.17	27.83	8.20	23.80	33426	19127	12.67	9.58	2747	1201	2334	803
40 x 40	1.6	1.6	0.340	126.00	10.56	29.44	10.56	29.44	20144	20144	12.64	12.64	1908	684	1908	684
40 x 40	3.0	2.5	0.627	232.30	11.07	28.93	11.07	28.93	35893	35893	12.43	12.43	3243	1241	3243	1241
40 x 40	4.0	2.5	0.824	305.30	11.44	28.56	11.44	28.56	46147	46147	12.29	12.29	4033	1616	4033	1616
40 x 40	6.0	4.0	1.208	447.40	12.15	27.85	12.15	27.85	64573	64573	12.01	12.01	5315	2319	5315	2319
50 x 40	3.0	2.5	0.708	262.30	14.95	35.05	9.97	30.03	66740	38348	15.95	12.09	4465	1904	3845	1277
50 x 40	4.0	2.5	0.932	345.30	15.33	34.67	10.35	29.65	86305	49349	15.81	11.95	5630	2489	4768	1664
50 x 40	6.0	4.0	1.370	507.40	16.03	33.97	11.07	28.93	122174	69183	15.52	11.68	7620	3597	6251	2391
60 x 40	4.0	2.5	1.040	385.30	19.45	40.55	9.48	30.52	143051	51903	19.27	11.61	7356	3528	5473	1701
60 x 40	6.0	4.0	1.532	567.40	20.15	39.85	10.21	29.79	204154	72855	18.97	11.33	10130	5123	7133	2446
80 x 40	4.0	2.5	1.256	465.30	28.14	51.86	8.20	31.80	315004	55724	26.02	10.94	11195	6074	6799	1752

Angles - Structural

Size	Thick-ness	Root Rad.	Mass per Metre	Area	Distance of neutral axis from extreme fibres				Second moment of Area		Radius of Gyration		Moduli of Section			
a x b	t	r	kg/m	mm^2	X_1	X_2	Y_1	Y_2	I_x	I_y	r_x	r_y	Zx_1	Zx_2	Zy_1	Zy_2
mm	mm	mm			mm	mm	mm	mm	mm^4	mm^4	mm	mm	mm^3	mm^3	mm^3	mm^3
80 x 40	6.0	4.0	1.856	687.40	28.86	51.15	8.96	31.04	454248	78366	25.71	10.68	15742	8882	8751	2524
80 x 40	8.0	6.0	2.440	903.70	29.54	50.46	9.71	30.29	582877	98414	25.40	10.44	19732	11551	10134	3249
50 x 50	1.6	1.6	0.427	158.00	13.06	36.94	13.06	36.94	39796	39796	15.87	15.87	3048	1077	3048	1077
50 x 50	3.0	2.5	0.789	292.30	13.57	36.43	13.57	36.43	71631	71631	15.65	15.65	5280	1966	5280	1966
50 x 50	4.0	2.5	1.040	385.30	13.95	36.05	13.95	36.05	92731	92731	15.51	15.51	6649	2572	6649	2572
50 x 50	6.0	4.0	1.532	567.40	14.66	35.34	14.66	35.34	131466	131466	15.22	15.22	8971	3720	8971	3720
80 x 50	6.0	4.0	2.018	747.40	26.78	53.22	11.85	38.15	491337	150572	25.64	14.19	18348	9232	12709	3947
80 x 50	8.0	6.0	2.656	983.70	27.46	52.54	12.58	37.42	631243	190599	25.33	13.92	22985	12015	15150	5094
100 x 50	6.0	4.0	2.342	867.40	35.52	64.48	10.62	39.38	908609	159026	32.36	13.54	25577	14092	14969	4039
100 x 50	8.0	6.0	3.088	1144.00	36.21	63.79	11.38	38.62	1174740	201601	32.05	13.28	32441	18416	17715	5220
125 x 50	3.0	2.5	1.397	517.30	45.72	79.28	8.32	41.68	872063	90312	41.06	13.21	19073	11000	10856	2167
125 x 50	6.0	4.0	2.747	1017.00	46.87	78.13	9.50	40.50	1674201	166910	40.56	12.81	35718	21429	17569	4121
60 x 60	3.0	2.5	0.951	352.30	16.07	43.93	16.07	43.93	125563	125563	18.88	18.88	7814	2858	7814	2858
60 x 60	6.0	4.0	1.856	687.40	17.16	42.84	17.16	42.84	233651	233651	18.44	18.44	13617	5454	13617	5454
80 x 80	6.0	4.0	2.504	927.40	22.16	57.84	22.16	57.84	573898	573898	24.88	24.88	25893	9923	25893	9923
80 x 80	8.0	6.0	3.304	1224.00	22.86	57.14	22.86	57.14	738755	738755	24.57	24.57	32315	12929	32315	12929
80 x 80	10.0	6.0	4.071	1508.00	23.60	56.40	23.60	56.40	890976	890976	24.31	24.31	37747	15799	37747	15799
125 x 80	8.0	6.0	4.276	1584.00	40.96	84.04	18.57	61.43	2563735	839610	40.23	23.02	62585	30508	45204	13669

Angles - Structural

Size	Thick-ness	Root Rad.	Mass per Metre	Area	Distance of neutral axis from extreme fibres				Second moment of Area		Radius of Gyration		Moduli of Section			
a x b	t	r	kg/m	mm^2	X_1	X_2	Y_1	Y_2	I_x	I_y	r_x	r_y	Zx_1	Zx_2	Zy_1	Zy_2
mm	mm	mm			mm	mm	mm	mm	mm^4	mm^4	mm	mm	mm^3	mm^3	mm^3	mm^3
125 x 80	10.0	6.0	5.265	1950.00	41.86	83.14	19.36	60.64	3117007	1014197	39.98	22.81	74464	37491	52389	16725
100 x 100	8.0	6.0	4.168	1544.00	27.86	72.14	27.86	72.14	1484413	1484413	31.01	31.01	53272	20578	53272	20578
100 x 100	10.0	6.0	5.151	1908.00	28.61	71.39	28.61	71.39	1802365	1802365	30.74	30.74	62989	25248	62989	25248

Rectangular Bar

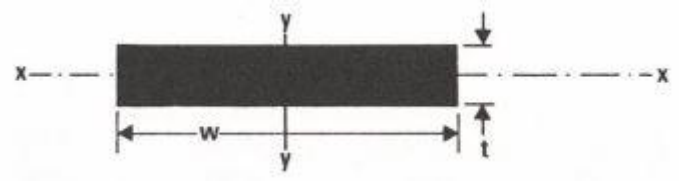

Rectangular Bar

Size	Mass per Metre	Area	Second moment of Area		Radius of Gyration		Moduli of Section		Perimeter	Factor
w x t mm	kg/m	mm^2	I_x mm^4	I_y mm^4	r_x mm	r_y mm	Z_x mm^3	Z_y mm^3	P mm	F
10 x 1.6	0.043	16.0	3.4	133	0.46	2.89	4.27	26.7	23.2	537
10 x 3	0.081	30.0	22.5	250	0.87	2.89	15.00	50.0	26.0	321
12 x 1.6	0.052	19.2	4.1	230	0.46	3.46	5.12	46.1	27.2	525
12 x 3	0.097	36.0	27.0	432	0.87	3.46	18.00	72.0	30.0	309
12 x 4	0.130	48.0	64.0	576	1.15	3.46	32.00	96.0	32.0	247
12 x 6	0.194	72.0	216.0	864	1.73	3.46	72.00	144.0	36.0	185
12 x 10	0.324	120.0	1000.0	1440	2.89	3.46	200.00	240.0	44.0	136
16 x 1.6	0.069	25.6	5.5	546	0.46	4.62	6.83	68.3	35.2	509
16 x 3	0.130	48.0	36.0	1024	0.87	4.62	24.00	128.0	38.0	293
16 x 4	0.173	64.0	85.3	1365	1.15	4.62	42.70	171.0	40.0	231
16 x 6	0.259	96.0	288.0	2048	1.73	4.62	96.00	256.0	44.0	170
16 x 10	0.432	160.0	1333.0	3413	2.89	4.62	267.00	427.0	52.0	120

Rectangular Bar

Size	Mass per Metre	Area	Second moment of Area		Radius of Gyration		Moduli of Section		Perimeter	Factor
w x t mm	kg/m	mm^2	I_x mm^4	I_y mm^4	r_x mm	r_y mm	Z_x mm^3	Z_y mm^3	P mm	F
20 x 1.6	0.086	32.0	6.8	1067	0.46	5.77	8.53	107.0	43.2	500
20 x 3	0.162	60.0	45.0	2000	0.87	5.77	30.00	200.0	46.0	284
20 x 4	0.216	80.0	107.0	2667	1.15	5.77	53.30	267.0	48.0	222
20 x 6	0.324	120.0	360.0	4000	1.73	5.77	120.00	400.0	52.0	160
20 x 10	0.540	200.0	1667.0	6667	2.89	5.77	333.00	667.0	60.0	111
20 x 12	0.648	240.0	2880.0	8000	3.46	5.77	480.00	800.0	64.0	99
25 x 1.6	0.108	40.0	8.5	2083	0.46	7.22	10.70	167.0	53.2	493
25 x 3	0.202	75.0	56.0	3906	0.87	7.22	37.50	312.0	56.0	277
25 x 4	0.270	100.0	133.0	5208	1.15	7.22	66.70	417.0	58.0	215
25 x 6	0.405	150.0	450.0	7812	1.73	7.22	150.00	625.0	62.0	153
25 x 10	0.675	250.0	2083.0	13021	2.89	7.22	417.00	1042.0	70.0	104
25 x 12	0.810	300.0	3600.0	15625	3.46	7.22	600.00	1250.0	74.0	91
25 x 16	1.080	400.0	8553.0	20833	4.62	7.22	1067.00	1667.0	82.0	76
25 x 20	1.350	500.0	16667.0	26042	5.77	7.22	1667.00	2083.0	90.0	67
32 x 3	0.259	96.0	72.0	8192	0.87	9.24	48.00	512.0	70.0	270
32 x 4	0.346	128.0	171.0	10923	1.15	9.24	85.30	683.0	72.0	208

Rectangular Bar

Size	Mass per Metre	Area	Second moment of Area		Radius of Gyration		Moduli of Section		Perimeter	Factor
w x t mm	kg/m	mm^2	I_x mm^4	I_y mm^4	r_x mm	r_y mm	Z_x mm^3	Z_y mm^3	P mm	F
32 x 6	0.518	192.0	576.0	16384	1.73	9.24	192.00	1024.0	76.0	147
32 x 10	0.864	320.0	2667.0	27306	2.89	9.24	533.00	1707.0	84.0	97
32 x 12	1.037	384.0	4608.0	32768	3.46	9.24	768.00	2048.0	88.0	85
32 x 16	1.382	512.0	10923.0	43691	4.62	9.24	1365.00	2731.0	96.0	69
32 x 20	1.728	640.0	21333.0	54613	5.77	9.24	2133.00	3413.0	104.0	60
40 x 3	0.324	120.0	90.0	16000	0.87	11.55	60.00	800.0	86.0	265
40 x 4	0.432	160.0	213.0	21333	1.15	11.55	107.00	1067.0	88.0	204
40 x 6	0.648	240.0	720.0	32000	1.73	11.55	240.00	1600.0	92.0	142
40 x 10	1.080	400.0	3333.0	53333	2.89	11.55	667.00	2667.0	100.0	93
40 x 12	1.296	480.0	5760.0	64000	3.46	11.55	960.00	3200.0	104.0	80
40 x 16	1.728	640.0	13653.0	85333	4.62	11.55	1707.00	4267.0	112.0	65
40 x 20	2.160	800.0	26667.0	106667	5.77	11.55	2667.00	5333.0	120.0	56
40 x 25	2.700	1000.0	52083.0	133333	7.22	11.55	2604.00	6667.0	130.0	48
50 x 3	0.405	150.0	112.0	31250	0.87	14.43	75.00	1250.0	106.0	262
50 x 4	0.540	200.0	267.0	41667	1.15	14.43	133.00	1667.0	108.0	200
50 x 6	0.810	300.0	900.0	62500	1.73	14.43	300.00	2500.0	112.0	138

Rectangular Bar

Size	Mass per Metre	Area	Second moment of Area		Radius of Gyration		Moduli of Section		Perimeter	Factor
w x t mm	kg/m	mm^2	I_x mm^4	I_y mm^4	r_x mm	r_y mm	Z_x mm^3	Z_y mm^3	P mm	F
50 x 10	1.350	500.0	4167.0	104167	2.89	14.43	833.00	4167.0	120.0	89
50 x 12	1.620	600.0	7200.0	125000	3.46	14.43	1200.00	5000.0	124.0	77
50 x 16	2.160	800.0	17066.0	166667	4.62	14.43	2133.00	6667.0	132.0	61
50 x 20	2.700	1000.0	33333.0	208333	5.77	14.43	3333.00	8333.0	140.0	52
50 x 25	3.375	1250.0	65104.0	260417	7.22	14.43	5208.00	10417.0	150.0	44
60 x 3	0.486	180.0	135.0	54000	0.87	17.32	90.00	1800.0	126.0	259
60 x 4	0.648	240.0	320.0	72000	1.15	17.32	160.00	2400.0	128.0	198
60 x 6	0.972	360.0	1080.0	108000	1.73	17.32	360.00	3600.0	132.0	136
60 x 10	1.620	600.0	5000.0	180000	2.89	17.32	1000.00	6000.0	140.0	86
60 x 12	1.944	720.0	8640.0	216000	3.46	17.32	1440.00	7200.0	144.0	74
60 x 16	2.592	960.0	20480.0	288000	4.62	17.32	2560.00	9600.0	152.0	59
60 x 20	3.240	1200.0	40000.0	360000	5.77	17.32	4000.00	12000.0	160.0	49
60 x 25	4.050	1500.0	78125.0	450000	7.22	17.32	6250.00	15000.0	170.0	42
80 x 3	0.648	240.0	180.0	128000	0.87	23.09	120.00	3200.0	166.0	256
80 x 4	0.864	320.0	427.0	170667	1.15	23.09	213.00	4267.0	168.0	194
80 x 6	1.296	480.0	1440.0	256000	1.73	23.09	480.00	6400.0	172.0	133

Rectangular Bar

Size	Mass per Metre	Area	Second moment of Area		Radius of Gyration		Moduli of Section		Perimeter	Factor
w x t mm	kg/m	mm^2	I_x mm^4	I_y mm^4	r_x mm	r_y mm	Z_x mm^3	Z_y mm^3	P mm	F
80 x 10	2.160	800.0	6667.0	426667	2.89	23.09	1333.00	10667.0	180.0	83
80 x 12	2.592	960.0	11520.0	512000	3.46	23.09	1920.00	12800.0	184.0	71
80 x 16	3.450	1280.0	27307.0	682667	4.62	23.09	3413.00	17067.0	192.0	56
80 x 20	4.320	1600.0	53333.0	853333	5.77	23.09	5333.00	21333.0	200.0	46
80 x 25	5.400	2000.0	104167.0	1066667	7.22	23.09	8333.00	26667.0	210.0	39
100 x 3	0.810	300.0	225.0	250000	0.87	28.87	150.00	5000.0	206.0	254
100 x 4	1.080	400.0	533.0	333333	1.15	28.87	267.00	6667.0	208.0	193
100 x 6	1.620	600.0	1800.0	500000	1.73	28.87	600.00	10000.0	212.0	131
100 x 10	2.700	1000.0	8333.0	833333	2.89	28.87	1667.00	16667.0	220.0	81
100 x 12	3.240	1200.0	14400.0	1000000	3.46	28.87	2400.00	20000.0	224.0	69
100 x 16	4.320	1600.0	34133.0	1333333	4.62	28.87	4267.00	26667.0	232.0	54
100 x 20	5.400	2000.0	66667.0	1666667	5.77	28.87	6667.00	33333.0	240.0	44
100 x 25	6.750	2500.0	130208.0	2083333	7.22	28.87	10417.00	41667.0	250.0	37
160 x 6	2.592	960.0	2880.0	2048000	1.73	46.19	960.00	25600.0	332.0	128
160 x 10	4.320	1600.0	13333.0	3413333	2.89	46.19	2667.00	42667.0	340.0	79
160 x 12	5.184	1920.0	23040.0	4096000	3.46	46.19	3840.00	51200.0	344.0	66

Rectangular Bar

Size	Mass per Metre	Area	Second moment of Area		Radius of Gyration		Moduli of Section		Perimeter	Factor
w x t mm	kg/m	mm^2	I_x mm^4	I_y mm^4	r_x mm	r_y mm	Z_x mm^3	Z_y mm^3	P mm	F
160 x 16	6.912	2560.0	54613.0	5461333	4.62	46.19	6827.00	68267.0	352.0	51
160 x 20	8.640	3200.0	106667.0	6826667	5.77	46.19	10667.00	85333.0	360.0	42
160 x 25	10.800	4000.0	208333.0	8533333	7.22	46.19	16667.00	106667.0	370.0	34

Square Bar

Size	Mass per Metre	Area	Second moment of Area		Radius of Gyration		Moduli of Section		Perimeter	Factor
mm	kg/m	mm^2	$I_x = I_y$ mm^4	$r_x = r_y$ mm	$Z_x = Z_y$ mm^3	P mm	F	mm	kg/m	mm^2
6	0.097	36	108	1.7	36.0	**24.0**	247.0	**6**	0.097	36
8	0.173	64	341	2.3	85.3	32.0	185.0	**8**	0.173	64
10	0.270	100	833	2.9	167.0	40.0	148.0	**10**	0.270	100
12	0.389	144	1728	3.5	288.0	48.0	123.0	**12**	0.389	144
14	0.529	196	3201	4.0	457.0	56.0	106.0	**14**	0.529	196
16	0.691	256	5461	4.6	683.0	64.0	93.0	**16**	0.691	256
18	0.875	324	8743	5.2	972.0	72.0	82.0	**18**	0.875	324
20	1.080	400	13333	5.8	1333.0	80.0	74.0	**20**	1.080	400
25	1.688	625	32552	7.2	2604.0	100.0	59.0	**25**	1.688	625
32	2.765	1024	87381	9.2	5461.0	128.0	46.0	**32**	2.765	1024
35	3.308	1225	125052	10.1	7146.0	140.0	42.0	**35**	3.308	1225
40	4.320	1600	213333	11.6	10667.0	160.0	37.0	**40**	4.320	1600
45	5.468	2025	341719	13.0	15188.0	180.0	33.0	**45**	5.468	2025
50	6.750	2500	520833	14.4	20833.0	200.0	30.0	**50**	6.750	2500
65	11.408	4225	1487552	18.8	45771.0	260.0	23.0	**65**	11.408	4225

Channels – Architectural

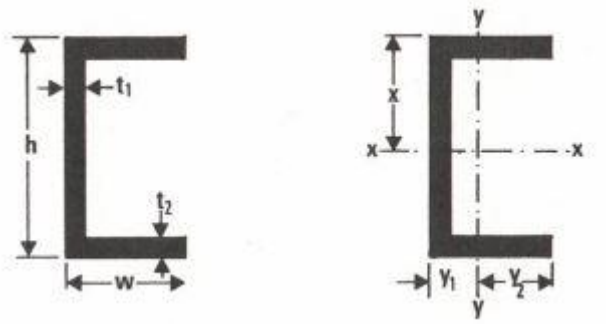

Channels – Architectural

Size							Mass per Metre	Area	Distance of neutral axis from extreme fibres			Second moment of Area		Radius of Gyration		Moduli of Section		
h x mm		w x mm		t_1 x mm		t_2 mm	kg/m	mm^2	x mm	y_1 mm	y_2 mm	Ix mm^4	Iy mm^4	rx mm	ry mm	Zx mm^3	Zy_1 mm^3	Zy_2 mm^3
10	x	10	x	1.6	x	1.6	0.116	42.88	5.00	3.93	6.07	613	412	3.78	3.10	123	105	68
10	x	10	x	2.5	x	1.6	0.132	49.00	5.00	3.70	6.30	637	432	3.61	2.97	127	117	69
10	x	12	x	1.6	x	1.6	0.133	49.28	5.00	4.85	7.15	727	692	3.84	3.75	145	143	97
10	x	20	x	1.6	x	1.6	0.202	74.88	5.00	8.66	11.34	1185	2923	3.98	6.25	237	337	258
12	x	10	x	1.6	x	1.6	0.124	46.08	6.00	3.72	6.28	963	442	4.57	3.10	160	119	70
12	x	12	x	1.6	x	1.6	0.142	52.48	6.00	4.60	7.40	1137	742	4.66	3.76	190	161	100
12	x	12	x	2.5	x	2.5	0.209	77.50	6.00	4.93	7.07	1456	1035	4.34	3.65	243	210	146
12	x	16	x	1.6	x	1.6	0.176	65.28	6.00	6.45	9.55	1486	1668	4.77	5.05	248	259	175
12	x	20	x	1.6	x	1.6	0.211	78.08	6.00	8.34	11.66	1835	3113	4.85	6.31	306	373	267
12	x	20	x	2.5	x	2.5	0.317	117.50	6.00	8.70	11.30	2380	4482	4.50	6.18	397	515	397

Channels – Architectural

Size							Mass per Metre	Area	Distance of neutral axis from extreme fibres			Second moment of Area		Radius of Gyration		Moduli of Section		
h x mm		w x mm		t_1 x mm		t_2 mm	kg/m	mm^2	x mm	y_1 mm	y_2 mm	Ix mm^4	Iy mm^4	rx mm	ry mm	Zx mm^3	Zy_1 mm^3	Zy_2 mm^3
16	x	12	x	1.6	x	1.6	0.159	58.88	8.00	4.19	7.81	2278	826	6.22	3.75	285	197	106
16	x	16	x	1.6	x	1.6	0.194	71.68	8.00	5.94	10.06	2840	1855	6.29	5.09	355	312	184
16	x	16	x	3	x	3	0.340	126.00	8.00	6.45	9.55	4378	3039	5.89	4.91	547	471	318
20	x	10	x	3	x	1.6	0.222	82.40	10.00	2.86	7.14	3901	544	6.88	2.57	390	190	76
20	x	16	x	1.6	x	1.6	0.211	78.08	10.00	5.52	10.48	4977	2012	7.98	5.08	498	364	192
20	x	16	x	2.5	x	2.5	0.317	117.50	10.00	5.85	10.15	6870	2889	7.65	4.96	687	494	285
20	x	20	x	2.5	x	2.5	0.371	137.50	10.00	7.61	12.39	8411	5440	7.82	6.29	841	714	439
20	x	20	x	3	x	3	0.437	162.00	10.00	7.80	12.20	9446	6280	7.64	6.23	945	806	515
20	x	25	x	3	x	3	0.518	192.00	10.00	10.09	14.91	11636	11813	7.78	7.84	1164	1170	793
25	x	12	x	3	x	3	0.348	129.00	12.50	4.01	7.99	10481	1551	9.01	3.47	838	386	194
25	x	16	x	1.6	x	1.6	0.232	86.08	12.50	5.08	10.92	8401	2175	9.88	5.03	672	428	199
25	x	20	x	2.5	x	2.5	0.405	150.00	12.50	7.08	12.92	14375	5912	9.79	6.28	1150	835	458
25	x	25	x	3	x	3	0.559	207.00	12.50	9.47	15.53	19977	12853	9.82	7.88	1598	1357	828
25	x	40	x	3	x	3	0.802	297.00	12.50	16.45	23.55	30935	47812	10.21	12.69	2475	2907	2030
32	x	16	x	1.6	x	1.6	0.263	97.28	16.00	4.59	11.41	15025	2360	12.43	4.93	939	514	207
32	x	25	x	3	x	3	0.616	228.00	16.00	8.74	16.26	36044	14080	12.57	7.86	2253	1611	866
40	x	12	x	3	x	3	0.470	174.00	20.00	3.36	8.61	34522	1795	14.09	3.21	1726	534	208

Channels – Architectural

Size								Mass per Metre	Area	Distance of neutral axis from extreme fibres			Second moment of Area		Radius of Gyration		Moduli of Section		
h x mm		w x mm		t_1 x mm		t_2 mm		kg/m	mm^2	x mm	y_1 mm	y_2 mm	Ix mm^4	Iy mm^4	rx mm	ry mm	Zx mm^3	Zy_1 mm^3	Zy_2 mm^3
40	x	20	x	2	x	2		0.410	152.00	20.00	5.74	14.26	36683	5760	15.53	6.16	1834	1004	404
40	x	20	x	3	x	3		0.599	222.00	20.00	6.10	13.90	50986	8059	15.15	6.03	2549	1322	580
40	x	25	x	3	x	3		0.680	252.00	20.00	8.05	16.95	61276	15234	15.59	7.78	3064	1893	899
40	x	40	x	3	x	3		0.923	342.00	20.00	14.48	25.52	92146	56579	16.41	12.86	4607	3907	2217
50	x	25	x	3	x	3		0.761	282.00	25.00	7.35	17.65	104246	16408	19.23	7.63	4170	2232	930
50	x	32	x	3	x	3		0.875	324.00	25.00	10.09	21.91	127472	32927	19.84	10.08	5099	3262	1503
50	x	40	x	4	x	4		1.318	488.00	25.00	13.80	26.20	194403	78588	19.96	12.69	7776	5694	3000
50	x	50	x	3	x	3		1.166	432.00	25.00	17.82	32.18	187196	113229	20.82	16.19	7488	6354	3518
60	x	32	x	3	x	3		0.956	354.00	30.00	9.36	22.64	195462	34982	23.50	9.94	6515	3736	1545
60	x	40	x	3	x	3		1.085	402.00	30.00	12.54	27.46	234486	65220	24.15	12.74	7816	5199	2376
80	x	25	x	3	x	3		1.004	372.00	40.00	5.94	19.06	323756	18813	29.50	7.11	8094	3170	987
80	x	40	x	4	x	4		1.642	608.00	40.00	11.47	28.53	586923	92158	31.07	12.31	14673	8032	3231
80	x	40	x	6	x	8		2.765	1024.00	40.00	13.62	26.38	963925	155845	30.68	12.34	24098	11438	5909
80	x	50	x	4	x	4		1.858	688.00	40.00	15.37	34.63	702549	172296	31.96	15.82	17564	11208	4976
100	x	25	x	3	x	3		1.166	432.00	50.00	5.32	19.68	560596	19874	36.02	6.78	11212	3736	1010
100	x	40	x	3	x	3		1.409	522.00	50.00	10.01	29.99	772366	76583	38.47	12.11	15447	7654	2553
100	x	40	x	6	x	6		2.722	1008.00	50.00	11.10	28.90	1402496	138252	37.30	11.71	28050	12461	4783

Channels – Architectural

Size							Mass per Metre	Area	Distance of neutral axis from extreme fibres			Second moment of Area		Radius of Gyration		Moduli of Section		
h x mm		w x mm		t_1 x mm		t_2 mm	kg/m	mm^2	x mm	y_1 mm	y_2 mm	Ix mm^4	Iy mm^4	rx mm	ry mm	Zx mm^3	Zy_1 mm^3	Zy_2 mm^3
100	x	50	x	3	x	3	1.571	582.00	50.00	13.61	36.39	913546	142993	39.62	15.67	18271	10504	3930
100	x	60	x	6	x	6	3.370	1248.00	50.00	18.58	41.42	1933376	439645	39.36	18.77	38668	23666	10614
125	x	20	x	3	x	3	1.288	477.00	62.50	3.64	16.36	867900	10758	42.66	4.75	13886	2957	657
160	x	25	x	3	x	3	1.652	612.00	80.00	4.20	20.80	1837516	21861	54.79	5.98	22969	5210	1051
180	x	80	x	6	x	11	7.312	2708.00	90.00	27.05	52.95	14556743	1785032	73.32	25.67	161742	65997	33710

Channels – Structural

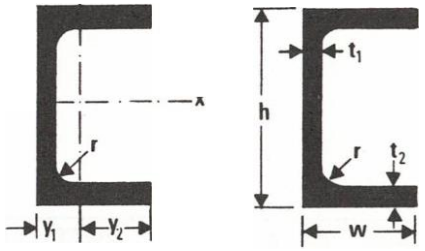

Size							Root Rad.	Mass per Metre	Area	Distance of neutral axis from extreme fibres			Second moment of Area		Radius of Gyration		Moduli of Section		
h	**x**	**w**	**x**	**t_1**	**x**	**t_2**	**r**			**x**	**y_1**	**y_2**	**I_x**	**I_y**	**r_x**	**r_y**	**Z_x**	**Zy_1**	**Zy_2**
mm		**mm**		**mm**		**mm**	**mm**	**kg/m**	**mm^2**	mm	mm	mm	**mm^4**	**mm^4**	mm	mm	**mm^3**	**mm^3**	**mm^3**
20	x	20	x	2.5	x	2.5	2.5	0.378	140.2	10.00	7.53	12.47	8541	5497	7.81	6.26	854	730	441
25	x	20	x	2.5	x	2.5	2.5	0.412	152.7	12.50	7.01	12.99	14615	5954	9.78	6.24	1169	849	458
50	x	25	x	3	x	3	2.5	0.769	284.7	25.00	7.32	17.68	105480	16447	19.25	7.60	4219	2248	930
60	x	32	x	4	x	4	2.5	1.260	466.7	30.00	9.69	22.31	249651	44691	23.13	9.79	8322	4610	2004
60	x	40	x	6	x	6	4.0	2.092	774.9	30.00	13.57	26.43	410327	117203	23.01	12.30	13678	8640	4434
80	x	25	x	3	x	3	2.5	1.012	374.7	40.00	5.92	19.08	327318	18828	29.56	7.09	8183	3182	987
80	x	25	x	6	x	6	4.0	1.930	714.9	40.00	7.02	17.98	576348	32457	28.39	6.74	14409	4621	1806
80	x	40	x	4	x	4	2.5	1.649	610.7	40.00	11.44	28.56	590292	92295	31.09	12.29	14757	8066	3232
80	x	40	x	6	x	6	4.0	2.416	894.9	40.00	12.15	27.85	823308	129145	30.33	12.01	20583	10630	4637
80	x	40	x	6	x	8	6.0	2.807	1039.5	40.00	13.53	26.47	978470	156466	30..68	12.27	24462	11563	5911
100	x	40	x	6	x	6	4.0	2.740	1014.9	50.00	11.07	28.93	1415262	138367	37.34	11.68	28305	12503	4782
100	x	50	x	6	x	9	6.0	3.800	1407.5	50.00	17.12	32.88	2169308	344432	39.26	15.64	43386	20123	10474
125	x	60	x	6	x	6	4.0	3.793	1404.9	62.50	16.86	43.14	3293829	473261	48.42	18.35	52701	28075	10970
160	x	60	x	6	x	9	6.0	5.258	1947.5	80.00	18.01	41.99	7670205	675541	62.76	18.62	95878	37513	16087
180	x	80	x	5	x	11	6.0	7.353	2723.5	90.00	26.94	53.06	14649954	1791046	73.34	25.64	162777	66495	**33752**

I-Beams - Structural

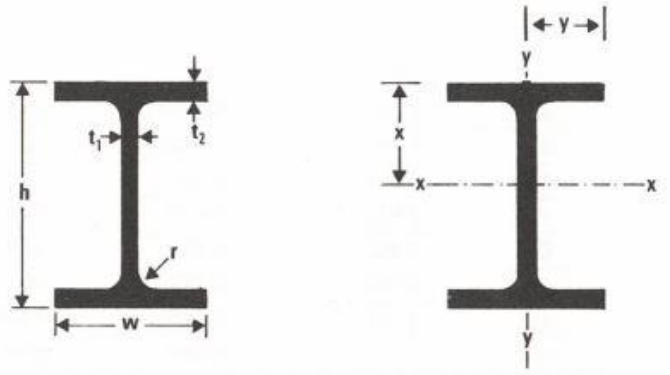

Size							Radius	Mass per Metre	Area	Distance of neutral axis from extreme fibres		Second moment of Area		Radius of Gyration		Moduli of Section	
h mm	x	w mm	x	t, mm	x	t_2 mm	r mm	kg/m	mm^2	x mm	y mm	I_x mm^4	I_y mm^4	r_x mm	r_y mm	Z_x mm^3	Z_y mm^3
60	**x**	60	**x**	4	**x**	6	4	2.499	925.7	30.0	30.0	571246	216379	24.84	15.29	19042	7213
80	**x**	40	**x**	4	**x**	6	4	2.067	765.7	40.0	20.0	778434	64485	31.88	9.18	19461	3224
100	**x**	**50**	**x**	4	**x**	6	4	2.607	965.7	50.0	25.0	1579889	125592	40.45	11.40	31598	5024
100	**x**	80	**x**	4	**x**	6	4	3.579	1326	50.0	40.0	2376209	512592	42.34	19.66	47524	12815
125	**x**	50	**x**	4	**x**	6	4	2.877	1066	62.5	25.0	2649397	125736	49.86	10.86	42390	5029
160	**x**	80	**x**	6	**x**	10	6	6.671	2471	80.0	40.0	10531060	856475	65.28	18.62	131638	21412
180	**x**	80	**x**	7	**x**	10	6	7.427	2751	90.0	40.0	14153921	858670	71.73	17.67	157266	21467
180	**x**	160	**x**	10	**x**	12	10	14.812	5486	90.0	80.0	30797865	8209794	74.93	38.69	342199	102622

Architectural Tees

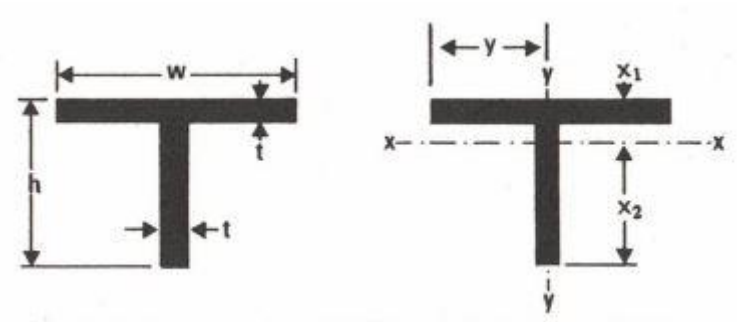

Architectural Tees

Width	Height	Wall Thick-ness	Mass per Metre	Area	Distance of neutral axis from extreme fibres			Second moment of Area		Radius of Gyration		Moduli of Section			Peri-meter	Factor
w	h	t	kg/m	mm^2	X_1	X_2	Y	I_x	I_y	r_x	r_y	Zx_1	Zx_2	Z_y	P	F
mm	mm	mm			mm	mm	mm	mm^4	mm^4	mm	mm	mm^3	mm^3	mm^3	mm	
20	20	1.6	0.166	61.44	5.59	14.41	10.00	2371	1073	6.21	4.18	424	165	107	80.0	482
20	20	3.0	0.300	111.00	6.09	13.91	10.00	4029	2038	6.03	4.29	661	290	204	80.0	267
25	25	1.6	0.209	77.44	6.84	18.16	12.50	4739	2091	7.82	5.20	693	261	167	100.0	478
25	25	3.0	0.381	141.00	7.35	17.65	12.50	8204	3956	7.63	5.30	1116	465	316	100.0	263
25	40	1.6	0.274	101.44	12.91	27.09	12.50	17248	2096	13.04	4.55	1336	637	168	130.0	475
32	32	2.5	0.415	153.75	8.92	23.08	16.00	15213	6865	9.95	6.68	1705	659	429	128.0	308
32	32	3.0	0.494	183.00	9.11	22.89	16.00	17851	8257	9.88	6.72	1960	780	516	128.0	259
40	25	2.5	0.422	156.25	5.75	19.25	20.00	8050	13363	7.18	9.25	1400	418	668	130.0	308
40	25	3.0	0.502	186.00	5.94	19.06	20.00	9406	16050	7.11	9.29	1585	493	802	130.0	259
40	40	3.0	0.624	231.00	11.11	28.89	20.00	35820	16083	12.45	8.34	3224	1240	804	160.0	257

Architectural Tees

Width	Height	Wall Thick-ness	Mass per Metre	Area	Distance of neutral axis from extreme fibres			Second moment of Area		Radius of Gyration		Moduli of Section			Peri-meter	Factor
w	h	t	kg/m	mm^2	X_1	X_2	Y	I_x	I_y	r_x	r_y	Zx_1	Zx_2	Z_y	P	F
mm	mm	mm			mm	mm	mm	mm^4	mm^4	mm	mm	mm^3	mm^3	mm^3	mm	
40	40	4.0	0.821	304.00	11.47	28.53	20.00	46079	21525	12.31	8.41	4016	1615	1076	160.0	195
50	32	3.0	0.640	237.00	7.37	24.63	25.00	20307	31315	9.26	11.49	2754	825	1253	164.0	256
50	32	4.0	0.842	312.00	7.74	24.26	25.00	25162	41816	8.98	11.58	3249	1037	1673	164.0	195
50	50	3.0	0.786	291.00	13.61	36.39	25.00	71497	31356	15.67	10.38	5252	1965	1254	200.0	255
50	50	4.0	1.037	384.00	13.98	36.02	25.00	92610	41912	15.53	10.45	6625	2571	1676	200.0	193
50	50	6.0	1.523	564.00	14.70	35.30	25.00	131260	63292	15.26	10.59	8928	3719	2532	200.0	131
60	40	4.0	0.842	312.00	6.62	33.38	30.00	30251	72192	9.85	15.21	4573	906	2406	200.0	237
60	60	6.0	1.847	684.00	17.21	42.79	30.00	233275	108972	18.47	12.62	13554	5452	3632	240.0	130
70	50	4.0	1.253	464.00	11.91	38.09	35.00	102213	114579	14.84	15.71	8579	2684	3274	240.0	192
70	50	6.0	1.847	684.00	12.65	37.35	35.00	145170	172292	14.57	15.87	11477	3887	4923	140.0	130

Structural Tees

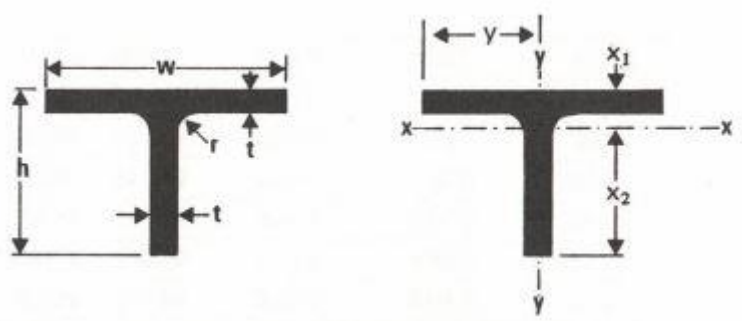

Width	Height	Wall Thick-ness	Corner Radius	Mass per Metre	Area	Distance of neutral axis from extreme fibres			Second moment of Area		Radius of Gyration		Moduli of Section			Peri-meter	Factor
w	h	t	r	kg/m	mm^2	X_1	X_2	Y	I_x	I_y	r_x	r_y	Zx_1	Zx_2	Z_y	P	F
mm	mm	mm	mm			mm	mm	mm	mm^4	mm^4	mm	mm	mm^3	mm^3	mm^3	mm	
25	25	3.0	2.5	0.388	143.68	7.28	17.72	12.50	8242	3968	7.57	5.25	1132	465	317	97.9	252
40	25	3.0	2.5	0.509	188.68	5.90	19.10	20.00	9420	16061	7.07	9.23	1596	493	803	127.9	251
50	50	4.0	2.5	1.044	386.68	13.91	36.09	25.00	92843	41930	15.50	10.41	6673	2573	1677	197.9	190
50	50	6.0	4.0	1.541	570.87	14.61	35.39	25.00	131679	63401	15.19	10.54	9014	3721	2536	196.6	128
60	40	4.0	2.5	1.044	386.68	9.47	30.53	30.00	51936	72210	11.59	13.67	5487	1701	2407	197.9	190
60	60	6.0	4.0	1.865	690.87	17.11	42.89	30.00	234013	109080	18.40	12.57	,13679	5456	3636	236.6	127
70	50	4.0	2.5	1.260	466.68	11.87	38.13	35.00	102355	114597	14.81	15.67	8622	2685	3274	237.9	189
70	50	6.0	4.0	1.865	690.87	12.59	37.41	35.00	145395	172400	14.51	15.8	11547	3887	4926	236.6	127

Top hats

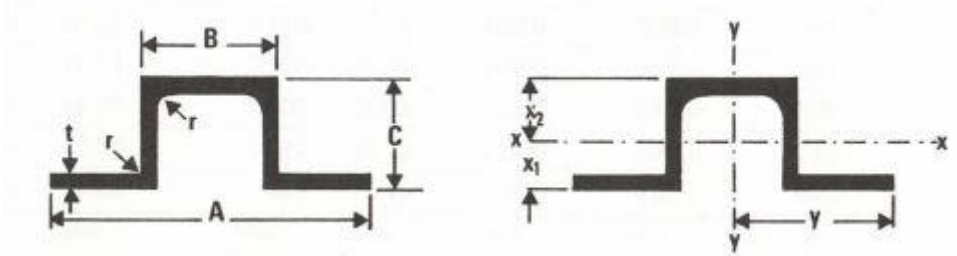

				Mass per Metre	Area	Distance of neutral axis from extreme fibres			Second moment of Area		Radius of Gyration		Moduli of Section			Peri-meter	Factor
B	C	t	r	kg/m	mm^2	X_1	X_2	Y	I_x	I_y	r_x	r_y	Zx_1	Zx_2	Z_y	P	F
mm	mm	mm	mm			mm	mm	mm	mm^4	mm^4	mm	mm	mm^3	mm^3	mm^3	mm	
25	25	2.5	2.5	0.723	267.86	10.93	14.07	30.00	23800	60680	9.43	15.05	2178	1691	2023	210.7	291.0
32	32	3.0	3.0	0.977	361.72	15.76	16.24	30.00	51727	92377	11.96	15.98	3282	3185	3079	236.8	243.0
32	32	3.0	3.0	1.139	421.72	13.73	18.27	40.00	62228	166377	12.15	19.86	4532	3406	4159	276.8	243.0
40	40	1.6	1.6	0.683	253.08	19.61	20.39	40.00	63064	114404	15.79	21.26	3216	3093	2860	314.1	460.0
40	40	3.0	3.0	1.268	469.72	19.29	20.71	40.00	109973	206828	15.30	20.98	5701	5310	5171	308.8	244.0

Rectangular tube

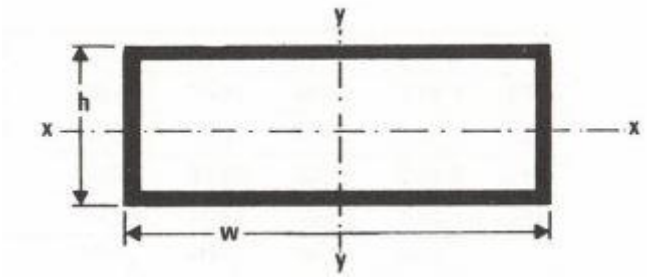

Rectangular Tube

Size		Wall	Mass per		Second moment of Area		Radius of Gyration		Moduli of Section		External	Total	
Width	Height	Thickness	Metre	Area							Perimeter	Perimeter	Factor
w	h	t			I_x	I_y	r_x	r_y	Z_x	Z_y	P_E	P_T	F
mm	mm	mm	kg/m	mm^2	mm^4	mm^4	mm	mm	mm^3	mm^3	mm	mm	
25	12	1.6	0.292	108.16	2362	8027	4.67	8.62	394	642	74.0	135.2	463
40	16	3.0	0.810	300.00	10820	52580	6.01	13.24	1352	2629	112.0	200.0	247
40	25	2.5	0.810	300.00	28750	61875	9.79	14.36	2300	3094	130.0	240.0	296
50	25	3.0	1.118	414.00	39954	125542	9.82	17.41	3196	5022	150.0	276.0	247
50	40	3.0	1.361	504.00	122552	175312	15.59	18.65	6128	7012	180.0	336.0	247
60	25	2.5	1.080	400.00	41458	172708	10.18	20.78	3317	5757	170.0	320.0	296
60	40	3.0	1.523	564.00	143132	273852	15.93	22.04	7157	9128	200.0	376.0	247
60	50	3.0	1.685	624.00	241672	322632	19.68	22.74	9667	10754	220.0	416.0	247
80	25	3.0	1.604	594.00	61870	425062	10.21	26.75	4950	10626	210.0	396.0	247
80	40	3.0	1.847	684.00	184292	558532	16.41	28.58	9215	13963	240.0	456.0	247

Rectangular Tube

Size		Wall	Mass per		Second moment of Area		Radius of Gyration		Moduli of Section		External	Total	
Width	Height	Thickness	Metre	Area							Perimeter	Perimeter	Factor
w	h	t			I_x	I_y	r_x	r_y	Z_x	Z_y	P_E	P_T	F
mm	mm	mm	kg/m	mm^2	mm^4	mm^4	mm	mm	mm^3	mm^3	mm	mm	
80	50	3.0	2.009	744.00	308032	647512	20.35	29.50	12321	16188	260.0	496.0	247
100	25	2.5	1.620	600.00	66875	654375	10.56	33.02	5350	13088	250.0	480.0	296
100	40	1.6	1.182	437.76	131323	551746	17.32	35.50	6566	11035	280.0	547.2	463
100	40	3.0	2.171	804.00	225452	980012	16.75	34.91	11273	19600	280.0	536.0	247
100	45	3.0	2.252	834.00	294710	1050602	18.80	35.49	13098	21012	290.0	556.0	247
100	50	3.0	2.333	864.00	374392	1121192	20.82	36.02	14976	22424	300.0	576.0	247
125	25	3.0	2.333	864.00	94742	1400842	10.47	40.27	7579	22413	300.0	576.0	247
125	40	3.0	2.576	954.00	276902	1735799	17.04	42.66	13845	27773	330.0	636.0	247
125	45	3.0	2.657	984.00	360972	1847452	19.15	43.33	16043	29559	340.0	656.0	247
125	50	3.0	2.738	1014.00	457342	1959104	21.24	43.96	18294	31346	350.0	676.0	247
125	80	3.0	3.224	1194.00	1314862	2629019	33.18	46.92	32872	42064	410.0	796.0	247
160	25	3.0	2.900	1074.00	120310	2750582	10.58	50.61	9625	34382	370.0	716.0	247
160	40	3.0	3.143	1164.00	295599	3305252	15.94	53.29	14780	41316	400.0	776.0	247
160	50	3.0	3.305	1224.00	573472	3675032	21.65	54.79	22939	45938	420.0	816.0	247
160	100	3.0	4,115	1524.00	2674172	5523932	41.89	60.20	53483	69049	520.0	1016.0	247
200	50	4.0	5.227	1936.00	897925	8560725	21.54	66.50	35917	85607	500.0	968.0	185

Round tube

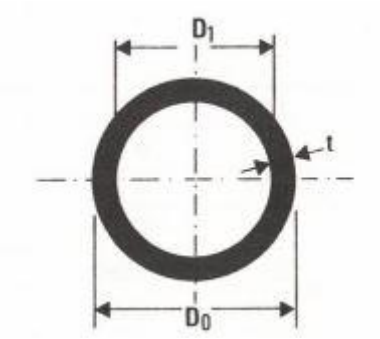

Round Tube										
Outside Diameter	Wall Thickness	Inside Diameter	Mass per Metre	Area	Second moment of Area	Radius of Gyration	Moduli of Section	Outside Perimeter	Total Perimeter	Factor
D_o	t	D_1		A	I	r	Z	Po	P_T	F
mm	mm	mm	kg/m	mm^2	mm^4	mm	mm^3	mm	mm	
6	1.0	4.0	0.042	15.71	51.1	1.80	17.0	18.9	**31.4**	741
10	1.0	8.0	0.076	28.27	290	3.20	58.0	31.4	56.5	741
10	1.2	7.6	0.090	33.18	327	3.14	65.4	31.4	55.3	617
10	1.6	6.8	0.114	42.22	386	3.02	77.2	31.4	52.8	463
12	1.0	10.0	0.093	34.56	527	3.91	87.8	37.7	69.1	741
12	1.2	9.6	0.110	40.72	601	3.84	100	37.7	67.9	617
12	1.6	8.8	0.141	52.28	724	3.72	121	37.7	65.3	463
16	1.0	14.0	0.127	47.12	1331	5.32	166	50.3	94.2	741
16	1.2	13.6	0.151	55.79	1538	5.25	192	50.3	93.0	617

Round Tube

Outside Diameter	Wall Thickness	Inside Diameter	Mass per Metre	Area	Second moment of Area	Radius of Gyration	Moduli of Section	Outside Perimeter	Total Perimeter	Factor
D_o	t	D_1		A	I	r	Z	Po	P_T	F
mm	mm	mm	kg/m	mm^2	mm^4	mm	mm^3	mm	mm	
16	1.6	12.8	0.195	72.38	1899	5.12	237	50.3	90.5	463
20	1.0	18.0	0.161	59.69	2701	6.73	270	62.8	119.4	741
20	1.2	17.6	0.191	70.87	3144	6.66	314	62.8	118.1	617
20	1.6	16.8	0.250	92.49	3944	6.53	394	62.8	115.6	463
25	1.0	23.0	0.204	75.40	5438	8.49	435	78.5	150.8	741
25	1.2	22.6	0.242	89.72	6369	8.43	510	78.5	149.5	617
25	1.6	21.8	0.318	117.62	8088	8.29	647	78.5	147.0	463
25	2.0	21.0	0.390	144.51	9628	8.16	770	78.5	144.5	370
25	3.0	19.0	0.560	207.35	12778	7.85	1022	78.5	138.0	247
28	1.2	25.6	0.273	101.01	9089	9.48	649	88.0	168.4	617
28	1.6	24.8	0.358	132.70	11603	9.35	829	88.0	165.9	463
28	2.0	24.0	0.441	163.36	13886	9.22	992	88.0	163.4	370
28	3.0	22.0	0.636	235.62	18673	8.90	1334	88.0	157.1	247
32	1.2	29.6	0.314	116.11	13790	10.90	862	100.5	193.5	617
32	1.6	28.8	0.413	152.81	17701	10.76	1106	100.5	191.0	463
32	3	26.0	0.738	273.32	29040	10.31	1815	100.5	182.2	247
32	4	24.0	0.950	351.86	35186	10.00	2199	100.5	175.9	185
40	1.2	37.6	0.395	146.27	27552	13.72	1378	125.7	243.8	617

Round Tube

Outside Diameter	Wall Thickness	Inside Diameter	Mass per Metre	Area	Second moment of Area	Radius of Gyration	Moduli of Section	Outside Perimeter	Total Perimeter	Factor
D_o	t	D_1		A	I	r	Z	Po	P_T	F
mm	mm	mm	kg/m	mm^2	mm^4	mm	mm^3	mm	mm	
40	1.6	36.8	0.521	193.02	35639	13.59	1782	125.7	241.3	463
40	2	36.0	0.645	238.76	43216	13.45	2161	125.7	238.8	370
40	3	34.0	0.942	348.72	60066	13.12	3003	125.7	232.5	247
40	4	32.0	1.221	452.39	74192	12.81	3710	125.7	226.2	185
40	6	28.0	1.730	640.88	95492	12.21	4775	125.7	213.6	123
50	1.2	47.6	0.497	183.97	54798	17.26	2192	157.1	306.6	617
50	1.6	46.8	0.657	243.28	71317	17.12	2853	157.1	304.1	463
50	2	46.0	0.814	301.59	87010	16.99	3480	157.1	301.6	370
50	3	44.0	1.196	442.96	122812	16.65	4912	157.1	295.3	247
50	4	42.0	1.561	578.05	154051	16.32	6162	157.1	289.0	185
50	6	38.0	2.239	829.38	204442	15.70	8178	157.1	276.5	123
60	1.2	57.6	0.599	221.67	95842	20.79	3195	188.5	369.5	617
60	1.6	56.8	0.793	293.55	125240	20.66	4175	188.5	366.9	463
60	2	56.0	0.984	364.42	153423	20.52	5114	188.5	364.4	370
60	3	54.0	1.450	537.21	218780	20.18	7293	188.5	358.1	247
60	4	52.0	1.900	703.72	277264	19.85	9242	188.5	351.9	185
60	6	48.0	2.748	1017.88	375596	19.21	12520	188.5	339.3	123
80	1.2	77.6	0.802	297.07	230632	27.86	5766	251.3	495.1	617

Round Tube

Outside Diameter	Wall Thickness	Inside Diameter	Mass per Metre	Area	Second moment of Area	Radius of Gyration	Moduli of Section	Outside Perimeter	Total Perimeter	Factor
D_o	t	D_1		A	I	r	Z	Po	P_T	F
mm	mm	mm	kg/m	mm^2	mm^4	mm	mm^3	mm	mm	
80	1.6	76.8	1.064	394.08	302907	27.72	7573	251.3	492.6	463
80	2	76.0	1.323	490.09	372957	27.59	9324	251.3	490.1	370
80	3	74.0	1.959	725.71	538657	27.24	13466	251.3	483.8	247
80	4	72.0	2.579	955.04	691452	26.91	17286	251.2	477.5	185
80	6	68.0	3.766	1394.87	961063	26.25	24027	251.3	465.0	123
48.4*	4	39.5	1.666	616.91	150	15.61	6213	152.1	176.0	166
* Note: Standard Scaffold Tube										
100	1.2	97.6	1.006	372.47	454544	34.93	9091	314.2	620.8	617
100	1.6	96.8	1.335	494.61	598797	34.79	11976	314.2	618.3	463
100	2	96.0	1.663	615.75	739518	34.66	14790	314.2	615.8	370
100	3	94.0	2.468	914.20	1076246	34.31	21525	314.2	609.5	247
100	4	92.0	3.257	1206.37	139215"3	33.97	27843	314.2	603.2	185
100	6	88.0	4.784	1771.86	1964991	33.30	39300	314.2	590.6	123
100	10	80	7.634	2827.43	2898119	32.02	57962	314.2	565.5	74
125	1.6	121.8	1.675	620.28	1180860	43.63	18894	392.7	775.3	463
125	2	121.0	2.087	772.83	1461908	43.49	23391	392.7	772.8	370
125	3	119.0	3.105	1149.82	2140539	43.15	34249	392.7	766.5	247
125	4	117.0	4.105	1520.53	2785803	42.80	44573	392.7	760.3	185

Round Tube

Outside Diameter	Wall Thickness	Inside Diameter	Mass per Metre	Area	Second moment of Area	Radius of Gyration	Moduli of Section	Outside Perimeter	Total Perimeter	Factor
D_o	t	D_1		A	I	r	Z	Po	P_T	F
mm	mm	mm	kg/m	mm^2	mm^4	mm	mm^3	mm	mm	
125	6	113.0	6.056	2243.10	3980656	42.13	63691	392.7	747.7	123
125	10	105.0	9.755	3612.83	6017623	40.81	96282	392.7	722.6	74
140	4	132.0	4.614	1709.03	3954687	48.10	56496	439.8	854.5	185
140	6	128.0	6.820	2525.84	5680615	47.42	81152	439.8	841.9	123
140	10	120.0	11.027	4084.07	8678650	46.10	123981	439.8	816.8	74
160	4	152.0	5.293	1960.35	5967317	55.17	74591	502.7	980.2	185
160	6	148.0	7.838	2902.83	8618507	54.49	107731	502.7	967.6	123
160	10	140.0	12.723	4712.39	13312499	53.15	166406	502.7	942.5	74
180	4	172.0	5.972	2211.68	8568053	62.24	95201	565.5	1105.8	185
180	6	168.0	8.856	3279.82	12427248	61.55	138081	565.5	1093.3	123
180	10	160.0	14.420	5340.71	19360065	60.21	215112	565.5	1068.1	74
180	12	156.0	17.100	6333.45	22458416	59.55	249538	565.5	1055.6	62
200	4	192.0	6.650	2463.01	11832294	69.31	118323	628.3	1231.5	185
200	6	188.0	9.873	3656.81	17219937	68.62	172199	628.3	1218.9	123
200	10	180.0	16.116	5969.03	27009843	67.27	270098	628.3	1193.8	74
200	12	176.0	19.136	7087.43	31439853	66.60	314399	628.3	1181.2	62

Square tube

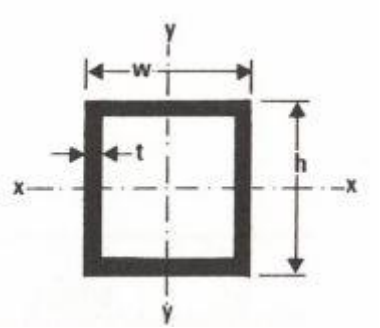

Size		Wall	Mass per		Second moment	Radius of	Moduli of	External	Total	
Width	Height	Thickness	Metre	Area	of Area	Gyration	Section	Perimeter	Perimeter	Factor
w	h	t			$I_x = I_y$	$r_x = r_y$	$Z_x = Z_v$	P_E	P_T	F
mm	mm	mm	kg/m	mm^2	mm^4	mm	mm^3	mm	mm	
12	12	1.6	0.180	66.56	1228	4.30	205	48.0	83.2	463
20	20	1.6	0.318	117.76	6695	7.54	670	80.0	147.2	463
20	20	3.0	0.551	204.00	10132	7.05	1013	80.0	136.0	247
25	25	1.6	0.404	149.76	13731	9.58	1098	100.0	187.2	463
25	25	3.0	0.713	264.00	21692	9.06	1735	100.0	176.0	247
32	32	1.6	0.525	194.56	30050	12.43	1878	128.0	243.2	463
32	32	3.0	0.940	348.00	49300	11.90	3081	128.0	232.0	247
40	40	1.6	0.664	245.76	60503	15.69	3025	160.0	307.2	463
40	40	3.0	1.199	444.00	101972	15.15	5099	160.0	296.0	247
45	45	2.5	1.148	425.00	128385	17.38	5706	180.0	340.0	296
50	50	2.5	1.282	475.00	179115	19.42	7165	200.0	380.0	296
80	80	6.0	4.795	1776.00	1631552	30.31	40789	320.0	592.0	123

Zeds

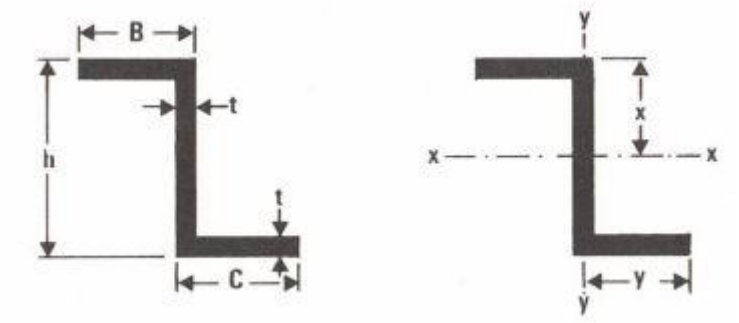

Height	Width of flange B x C		Wall Thickness	Mass per Metre	Area	Distance of neutral axis from extreme fibres		Second moment of Area		Radius of Gyration		Moduli of Section		Perimeter	Factor
h	B	C	t		A	x	y	I_x	I_y	r_x	r_y	Z_x	Z_y	P	F
mm	mm	mm	mm	kg/m	mm^2	mm	mm	mm^4	mm^4	mm	mm	mm^3	mm^3	mm	
16	16	16	1.6	0.019	71.68	8.00	15.20	2945	3751	6.41	7.23	368	247	92.8	479
20	20	20	3.0	0.437	162.00	10.00	18.50	12779	12702	8.88	8.85	1278	687	114.0	261
25	20	20	2.5	0.405	150.00	12.50	18.75	14375	11016	9.79	8.57	1150	588	125.0	309
32	25	25	3.0	0.616	228.00	16.00	23.50	36044	26021	12.57	10.68	2253	1107	158.0	257
40	20	20	3.0	0.599	222.00	20.00	18.50	50986	12746	15.15	7.58	2549	689	154.0	257
50	25	25	4.0	0.994	368.00	25.00	23.00	130763	32691	18.85	9.43	5231	1421	192.0	193
60	25	25	4.0	1.102	408.00	30.00	23.00	203936	32744	22.36	8.96	6798	1424	212.0	192